Report

Prepared for RPS Planning & Development

In connection with Structural Survey of 4 Nr Reema Flat Blocks in Milton Keynes

7551/R001 V000/12-07-13/JMF

Contents

CONTENTS i
REVISION HISTORY ii
QUALITY ASSURANCE iii

1. INTRODUCTION 1
2. SURVEY METHODOLOGY 2
3. RESULTS OF SURVEY 4
4. RECOMMENDATIONS 9

APPENDICES

Appendix A Address List
Appendix B Construction Details
Appendix C Sampling Methodology
Appendix D Tables of Results
Appendix E Laboratory Test Certificates
Appendix F Photographic Logs
Appendix G Defects Location Logs
Appendix H NTHAS and Housing Defects Legislation
Appendix I Concrete Repair Specification

Revision History

Revision	Amendments	Issued to	Date of Issue
00		[redacted] Senior Structural Engineer	12 July 2013

Quality Assurance

This report describes work commissioned by RPS Planning & Development on behalf of Milton Keynes Services Partnerships LLP under their email instruction dated 13 June 2013. The Client's representatives for the work were Mr [redacted] The survey was carried out by Michael Dyson Associates Limited over the period 18 June to 25 June 2013.

The report was:

Prepared by: .....

Michael Fletcher,
Associate

Approved by: .....

Alistair Dyson,
Managing Director

Date: 12 July 2013

© Michael Dyson Associates Ltd

The copyright of this report and any supplementary information issued to the client shall remain vested in Michael Dyson Associates Limited. It shall not be reproduced or passed to any other party without the express written consent of an authorised director of Michael Dyson Associates Limited.

1. Introduction

Michael Dyson Associates Limited was appointed by RPS Planning & Development on behalf of Milton Keynes Services Partnership LLP to undertake a Structural Appraisal of 4 Nr 4-storey Reema Flats Blocks at Bletchley, Milton Keynes.

The Reema properties, which were constructed during the 1950s, are of Prefabricated Reinforced Concrete (PRC) properties and are designated defective types within the meaning of the 1984 Housing Defects Act, consolidated into the 1985 Housing Act.

The defect is defined as the potential for corrosion of embedded steel reinforcement due to insufficient concrete cover. Precast concrete components were often manufactured with reinforcement cover depths that would be deemed inadequate by today's standards, making them prone to deterioration due to the effects of carbonation.

Carbonation is the process by which concrete reacts with the atmosphere, reducing the alkaline barrier around the embedded reinforcement. Over time this leads to corrosion of the steel, resulting in a loss of structural integrity.

Furthermore, concrete components produced around this time are also susceptible to chloride-induced attack. Calcium chloride was added to the concrete mix to accelerate the setting reaction but has subsequently been discovered to contribute to the corrosion process.

Designated defective PRC properties are considered generally to be un-mortgageable by lending institutions.

A detailed invasive investigation was undertaken at 4 Nr Reema Flats Blocks selected from a total of 15 Nr similar Blocks owned by Milton Keynes Council and managed by Milton Keynes Services Partnership LLP.

The invasive survey included testing of the concrete components. Dust samples of concrete were taken and analysed at a laboratory to determine cement content and the presence of Chloride Ion. Additional on site tests were carried out to determine the extent of carbonation penetration and depth of concrete cover to embedded steel reinforcement.

The properties are assessed in relation to the engineering requirements of the Non Traditional Homes Appraisal Scheme ("NTHAS") and the results of the concrete sampling will determine whether the properties will achieve the required standard for long term durability,, assessed in terms of an assured life of 30 years and also for mortgageability.

This report includes a summary of the results of the visual inspection of external elevations and intrusive tests. All laboratory results are certified by the testing station, Nicholls Colton Testing Limited, who are UKAS accredited.

The appendices to the report include further background information on the survey methodology and a brief outline of the construction details of the Reema flats blocks together with general background information on the processes involved in concrete deterioration, the housing defects legislation NTHAS.

- Refer to Appendix A for Address List of Surveyed Flats Blocks

2. Survey Methodology

2.1 Research and Visual Impressionistic Survey

From the initial information gathered during the impressionistic inspection of the Reema flats at the site at Bletchley, Milton Keynes it became clear that no structurally significant improvement works have previously been carried out.

A review of available reports from independent sources of technical publication (such as The Building Research Establishment (BRE)) and our own comprehensive internal technical library on non-traditional properties was carried out prior to undertaking the appraisal and investigation.

The general construction details and recommended methods of inspection of Reema Non-traditional property types are contained within reports by BRE should either RPS Planning & Development or Milton Keynes Services Partnership LLP wish to review these.

General schematic construction drawings are included within the appendices for ease of reference.

- Refer to Appendix B for Construction Details

2.2 Detailed Investigation

The detailed invasive investigation is a progression from the desk top review and included a detailed inspection of external elevations and internal communal areas to identify observed defects to the concrete structure and also sampling the 4 Nr Reema flats blocks selected for survey by the Council to establish present condition and was carried out in accordance with the general principles of the Non-Traditional Homes Appraisal Scheme (NTHAS) including:-

- Determination of the location and configuration of principal structural components including inspections of accessible roof voids.
- Sampling of Precast Reinforced Concrete (PRC) and In-situ components for testing and independent UKAS accredited laboratory analysis to determine reinforcement cover, depth of carbonation and chloride content.
- Examination of principal concrete components and connections to determine adequacy of construction and progress of any deterioration.

All investigations were carried out cognisant of BRE guidance (where applicable) and our own extensive experience of non-traditional property types generally.

- Refer to Appendix C for Sampling Methodology and Concrete Deterioration.

The results of concrete testing are included within the report in tabular form

- Refer to Appendix D for Tables of Results.
- Refer to Appendix E for Laboratory Test Certificates.

A photographic record of elevations of the surveyed blocks together with examples of observed defects, are included to illustrate the survey findings and to illustrate the construction details of the Reema type flats blocks at Bletchley, Milton Keynes.

- Refer to Appendix F for a Log of the Photographic Record.
- Refer to Appendix G for Elevations and Plans Defects Logs

The properties are assessed in relation to the engineering requirements of the Non Traditional Homes Appraisal Scheme ("NTHAS"), the required standard for assured life and mortgageability.

- Refer to Appendix H for Housing Defects Legislation and Restoring Mortgageability.

Where defects to the concrete are identified repairs will be required. Typical specifications for proprietary repair products are included within the appendices to the report for ease of reference,, although other similar products are also available.

- Refer to Appendix I for Concrete Repair Specifications

2.3 Limitations of Survey

The scope of the survey will be limited to the area specifically detailed in the report and letter of appointment. No responsibility will be taken for any defect to any area outside of the defined scope. Unless specifically stated the report does not constitute a full structural report of the premises.

The present survey is restricted to consideration of the non-traditional related structural elements of the properties. The condition of doors, windows, guttering, rainwater goods, canopies, outbuildings and external fixtures and fittings, together with gas, water and electrical service, central heating, flues, bathroom and kitchen fittings and internal decorations are all excluded from the survey except where they have a direct impact on structural condition and recommended repairs.

No testing of electrical, mechanical, water, drainage, or other services was undertaken. Manhole covers were not lifted and below ground drainage was not tested.

Trial holes to inspect foundations were not undertaken as part of the structural investigation.

No comment has been made on lead water pipes or toxic mould, even where visible without opening up works. We cannot assess any possible effect on health of such materials. We strongly advise that inspections by companies specialising in the identification and treatment of asbestos and other such materials (including toxic mould) are commissioned. We also recommend the timberwork is inspected by specialist timber treatment companies.

Testing for or enquiry about contamination, pollution or the possibility of Methane gas from geological or organic sources, or the presence of or susceptibility to Radon gas, have not been carried out as part of the survey. Whilst the presence of such gases in harmful amounts is not a common occurrence, we recommended that tests be carried out since this may well affect the future value of properties and affect planned maintenance. We have not carried out investigations to determine whether the properties have been built on a land fill site.

Identification and testing for the possible presence of asbestos-containing materials and other deleterious material generally is considered to be outside the scope of the survey. Recommendations are given on the assumption that such materials have not been used.

Privately owned properties and leasehold properties within part of a larger building or complex have not been inspected unless specifically instructed.

Boundaries, outbuildings, garages, fences, walls and paths, have not been inspected unless specifically instructed.

No advice has been given in relation to the properties on apparent contraventions of the building regulations other than on structural issues. We have not commented on; means of escape in case of fire; access for disabled persons, and general health and safety issues.

No formal enquiries in respect of exiting user rights, town planning and road widening, legal interests, fire certificates, effluent agreements, party wall agreements, prescriptive rights, easements, wayleaves, tree preservation orders, conservation areas, service charges or collateral warranties were made as part of the present survey.

We have assumed that the properties are not subject to any unusual or especially onerous restrictions or covenants which apply to the structures or affect the reasonable enjoyment of the properties. We have also assumed that the properties are unaffected by any matters which would be revealed by a local search and replies to the usual enquiries, or by a Statutory Notice, and that neither the properties condition, use or intended use, is or will be unlawful.

No enquiries have been made with statutory authorities in respect of adjustment works to apparatus fixed to the elevations of the properties, such as overhead electrical power cables.

No enquiries in respect of mining activities or other mineral extractions have been made. Coal Reports have not been obtained as part of the present survey.

All information forwarded to us has been assumed to be accurate.

Where further investigations are required, we strongly recommend that such investigations and reports be obtained prior to the commissioning of any construction work. We strongly recommend that an asbestos survey be commissioned prior to commencement of any recommended works.

This report is not a valuation. Prudent purchasers will require to see a valuation prior to the commissioning of any building work or the exchange of contracts or signing leases/agreement to lease documents. We strongly recommend that a valuation be commissioned by qualified valuers.

This report may not be relied upon by a third party for any purpose without the written consent of Michael Dyson Associates Limited. Furthermore, this report has been prepared and issued specifically for the benefit of RPS Planning & Development and Milton Keynes Services Partnership LLP; no responsibility will be extended to any third party for the whole or part of its contents.

Notwithstanding any other term of our agreement, our duties are not absolute but are instead duties to exercise the standard of reasonable skill and care normally expected of members of our profession in carrying out the duties in question.

3. Results of Survey

3.1 Reema Flats Construction Details

Typical Front Elevation Reema Flats Block

Typical Rear and flank end Elevation Reema Flats Block

Reema houses, bungalows and low-rise flats were produced from the late 1940's to the mid 1970's and comprise a kit of components from which a host of layouts could be devised.

The flats blocks at Bletchley are of Reema Hollow Panel form of construction.

Reema Hollow Panel PRC type properties are classified as 'defective' dwellings under The 1985 Housing Act and a total of 17,600 were constructed between 1946 and 1966. Later versions of Reema property include the related Conclad low-rise system, built between 1967 and the late 1970s and the later Contrad low rise and high rise designs built between 1969 and the late 1970s.

External walls comprise storey-height load bearing concrete panels, which have channel shaped rebates in their upper and vertical edges to act as permanent forms for insitu reinforced concrete columns between panels. There are insitu cast reinforced concrete ring beams at first and upper floor levels and eaves level, providing jointing and structural support to the panels.

The wall panels are hollow double-skinned components, typically 280mm thick overall, with inner and outer leaves of 25mm and 38mm thickness respectively. Ribs connect the wall leaves together and generally only the ribs and perimeter of the panel are reinforced. Heavy mild steel lifting hooks are cast in to each panel.

The external wall panels have an unpainted aggregate finish, which is typical of early variants of Reema construction. Internally, the panels are lined with fibreboard sheets, cast integral with the panels, which is finished with a plaster skim.

Window and door openings within PRC wall panel units have a decorative reinforced concrete surround and projecting cills. Main entrance doors to the stairwells have a cantilever type PRC canopy unit.

The corners of flank end walls have PRC corner column units which project forwards beyond the line of the front and rear elevation and the insitu cast concrete column junction between external wall panels and internal load bearing dividing wall panels at these flank end walls is covered by a slender flat PRC cover panel, both of which is peculiar to this form of flats construction in our experience.

Internal load bearing walls separating flats and communal areas consist of precast panels and insitu columns and ring beams of similar construction to the external wall. This construction is continued into the roof space and in the original constructed form is designed to provide an effective fire stop between dwellings. Dividing wall panels may occasionally be filled with sand to reduce sound transmission between dwellings.

The roof structure is of traditional pitched timber rafter/purlin construction, clad with concrete tiles on felt and battens. Chimneys are formed from precast concrete units and have a rendered finish above roof ridge line.

Staircases are of reinforced concrete and the wall panels within communal areas have the same exposed aggregate finish as the external wall panels at these blocks of flats.

Floors in communal staircase areas are of solid in-situ poured concrete slab construction. Floors between flats are of PRC panel slab construction supported by Insitu cast reinforced concrete beams visible below ceiling level at internal partition locations.. Ceilings are plastered directly to the concrete slab.

Foundations typically consist of concrete pads with stub foundation piers that align with the insitu columns between panels, although this has not been confirmed during the present investigation.

- Refer to Appendix B for Construction Details

3.2 Potential Structural Problems

In common with other non-traditional PRC property types, poor levels of concrete cover can lead to corrosion of embedded reinforcement, cracking of concrete elements and subsequent loss of structural integrity.

High levels of chloride ion content in either the PRC elements or the insitu cast units can also lead to similar corrosion of steel reinforcement, although this is often in the form of localised pitting and loss of section leading to reduced structural resistance of units rather than as observed expansive cracking and spalling.

Corrosion induced cracking of the ribs between the inner and outer leaves of wall panels can lead to detachment of outer skins in extreme cases. Such corrosion and cracking may be exacerbated by the effects of high internal levels of humidity or interstitial condensation due to poor thermal performance of external walls.

3.3 Stock Distribution

The address list provided included a total of 15 Nr Milton Keynes Services Partnership LLP managed Reema Flats Blocks located at a various sites within Bletchley, Milton Keynes. The properties are believed to have been built in the period 1946/48.

Only 4 Nr blocks, representing 27% of the stock of Reema flats Blocks owned by Milton Keynes Services Partnership LLP at Bletchley were however selected by the council for inspection and investigation during the present survey and all these are of 4 - storey 12 in-a-block flats lay of “T-Shaped” plan layout.

The survey proposed by the Council included for a visual inspection and concrete sampling of PRC components from the 4 Nr Reema Flats Blocks, namely;

- Norfolk House, Essex Close
- Sawley House, Westminster Drive

- Stirling House, Chester Close
- Waltham House, Whaddon Way

3.4 Internal Visual Survey Findings

Roof structures at the flat blocks inspected were generally found to be in fair structural condition, with no splits and shakes observed to roof timbers. Sarking felt was noted to also be in fair condition with no tears noted.

Moisture contents of roof timbers were recorded at a maximum of 14% which is well below levels at which decay can be expected. No decay or evidence of insect or fungal attack was observed indicating that roofs have largely remained dry and well ventilated.

Party wall PRC panels were noted to be in sound, crack free condition and the in-situ joint between panels well formed. However access doors cut into the PRC party walls above communal areas create an inadequate party wall fire stop between flats. These access doors appear to have been formed to provide access into the various roof voids above separate flats and if this access is to be retained the doors should be replaced with appropriate fire doors. If access is no longer required then the openings could be blocked with masonry with a rendered finish to ensure an adequate fire and smoke barrier. Gaps at built in purling timbers and ridges should also be adequately sealed against the spread of smoke and flame in the event of a fire.

Water staining of precast chimney sections was observed, indicating leaks around flashings, although this appears to be historic as daylight was not viewed at flashings.

Levels of loft insulation was noted to be variable and ranged from 150mm to 200mm in thickness at the flats blocks inspected and is below levels currently recommended by current Building Regulations.

Internally, access to individual flats was not available at the time of the survey. However access to each floor of the communal areas was inspected and minor cracking of PRC wall panels and panel joints was noted at all of the blocks inspected.

No significant cracking or spalling to the staircase units, floors or ceilings was observed, nor was there evidence of heave of ground floors associated with reactive fill materials or ground movements.

- Refer to Appendix D.2 for Summary of Internal Visual Inspections.

3.5 External Visual Survey Findings

The visual inspections of external elevations of the Reema flats blocks identified relatively little deterioration of the external concrete wall panels or of defects to roof finishes.

Generally minor areas of deterioration and defects of a non-structural nature to external elevations were observed at the flats blocks, including cracking of corner PRC column units and PRC cover panels linking wall panel units at flank end gables and deterioration of non-structural window reveals, cills and surround units.

Areas of previous patch repairs and staining of concrete cladding panels was noted at the majority of blocks inspected. Minor rust spotting to the PRC panels was also noted at Stirling House.

Water staining, cracking and spalling to PRC front door canopies was observed at all of the blocks inspected.

Such cracking is typically associated with corrosion of the steel reinforcement within the PRC panels due to low concrete cover but may allow water ingress into the structure and could lead to eventual further deterioration of the PRC panels.

Structurally, roofs appear to be in reasonable condition generally with only minor undulations in the roof line observed. Moss growth was noted to the majority of the roofs of the properties inspected.

Original timber soffits and fascias are generally in fair condition with no decay observed and minor flaking paint noted.

Ground levels bridging dpc was also noted at Norfolk House.

Cracking and shaling to the unreinforced concrete floor slab edge was noted to 2 Nr of the blocks inspected.

- Refer to Appendix D.1 for Summary of External Visual Inspections.
- Refer to Appendix G for Defects Locations Elevation drawings.

3.6 Concrete Testing Results

Externally, samples of the PRC wall panels and in-situ concrete columns and ring beams were taken for laboratory analysis. In order to assess the chloride content of concrete, it is first necessary to establish the likely cement content. The cement content was calculated by amalgamating all the samples of the PRC panels and all the samples of the in-situ column and ringbeam components at the properties. A cement content of 20% by weight of concrete was used to calculate the chloride content of the sample, which is typical of reinforced concrete used in the construction of Reema Hollow Panel properties generally in our experience.

- Refer to Appendix D.3 for Summary of Cement Content Analysis.

Dust samples were taken from a total of 80 Nr components across the 4 Nr Flats Blocks at the site, including accessible PRC wall panels, in-situ columns and ring beams. Samples were analysed at a UKAS accredited laboratory and the percentage chloride ion by weight of cement derived for each sample.

- Refer to Appendix E for Laboratory Test Certificates.

The majority of samples including all of the columns tested returned low levels of chloride (below 0.4 % by weight of cement as defined by BRE). However 34 Nr samples of panels and ring beams returned moderate levels of chloride (and above 0.6% by weight of cement) and of these 12 Nr samples returned high levels of chloride (at above 1.0% by weight of cement) as defined by BRE.

It is considered likely that chloride ion was added somewhat randomly to the precast concrete components used in the construction of these Reema Flats. There is therefore a significant risk of corrosion of steel reinforcement by chloride ion contamination of the concrete in the long-term.

- Refer to Appendix D.5 for summary of chloride content analysis.

Measurements of carbonation penetration of PRC panel units were noted to be generally low however incidences of more complete carbonation to beyond the depth of steel reinforcement was detected at 4 Nr

panels across 3 Nr of the Flats Blocks inspected. Carbonation of the in-situ concrete column and ringbeam components was also noted to be generally low at between 1mm and 30mm typically.

Steel reinforcement, where exposed during sampling of the concrete at the flats blocks, was generally noted to be free of significant corrosion with no surface scale or loss of section observed typically. However a single area of steel reinforcement exposed in a PRC panel at Stirling house was noted to be severely corroded and loss of cross section was observed. This was located in an area that had been previously patch repaired.

Reinforcement in external wall panels is generally considered to be at low risk of corrosion at present if wetted due to the effects of carbonation, although carbonation as noted may be variable in areas not sampled. Panels can therefore be expected to continue to suffer deterioration at an accelerated rate due to the effects of carbonation if not protected from the elements in the long term.

Steel reinforcement within the in-situ concrete column and ringbeam components will also gradually lose the protection of the naturally alkaline concrete and therefore the effectiveness of the proposed external overcladding and low levels of internal humidity will need to be maintained to ensure that steel remains in a warm and dry environment in the long term.

Investigation of the in-situ concrete columns between the PRC wall panels during concrete sampling at the flats confirmed that the in-situ concrete, where inspected at least, is well compacted. No areas of loose or voided concrete were observed in column elements during the present structural assessment, although areas of voided concrete elsewhere cannot be discounted.

- Refer to Appendix D.6 for summary of depth of cover and carbonation analysis.

3.7 Existing U-values

The existing external wall structure of the Reema form of construction is poorly insulated and has a high U-value by present day Building Regulations standards. Calculations of the wall U-value from observations and measurements taken from similar Reema properties to those surveyed properties at Bletchley indicate a worst case U-value of 2.23 W/m^2K at present for the concrete PRC wall panels.

The roof structure as originally constructed is also poor thermally, although this can be improved significantly by the simple addition of extra layers of insulation.

4. Recommendations

4.1 Structural Repairs

Based on the analysis of laboratory results and our visual observations, the Reema flats inspected at Bletchley, Milton Keynes appear to be in fair structural condition at present however PRC components are starting to show signs of concrete deterioration. The properties appear to be in original condition and have not previously benefited from a programme of general improvement, except the installation of uPVC double-glazed windows. Wall panels of the Reema flats blocks at Bletchley are un-painted therefore are un-protected from the elements at present.

Carbonation penetration of the PRC components has reached the depth of embedded steel reinforcement in some of the wall panels sampled. Cracking and spalling of the external wall panels has begun to manifest, and panels are therefore now vulnerable to the effects of accelerated corrosion if external elevations are left exposed to wetting by the elements.

Chloride ion contents of the PRC components are generally low to moderate as defined by BRE, however a significant number of high results were returned to suggest that chloride ion was added somewhat randomly to the mix during casting of the external wall panel components. “Hot spots” of high chloride content can therefore be anticipated within individual PRC panel units and affected panels may be distributed around the various flat blocks at higher levels or in areas of the lower levels tested within the present survey. Despite the generally low to moderate results, the effects of possible high chloride ion content may therefore be present in areas of all blocks and can not be excluded on the basis of the present minimal testing regime.

The presence of high levels of carbonation penetration and high chloride content within the concrete indicates a long term risk of corrosion of reinforcement within the webs of the PRC hollow panel elements. The effects of chloride induced corrosion may eventually result in cracking of the nibs between the inner and outer skins of the hollow panels and the risk of detachment and loss of structural integrity.

The adverse effects of this potential degradation can be mitigated by the adoption of additional remedial tying and corner strapping measures prior to overcladding to strengthen the existing structure.

As noted in Section 3, access doors cut into the PRC party walls above communal areas within the roof voids create an inadequate party wall fire stop between flats. These openings appear to have been formed to provide access into the various roof voids above separate flats and if access is to be retained the doors should be replaced with appropriate fire doors, otherwise openings could be blocked with masonry with a rendered finish to ensure an adequate fire and smoke barrier. Gaps at built in purling timbers and ridges should also be adequately sealed against the spread of smoke and flame in the event of a fire.

4.2 Assured Life repairs

The results of the concrete testing indicate that the concrete structures remain suitable for retention as load bearing elements in the long-term, subject to the installation of ties and strapping as noted above, the repair of any localised defects and further protection from exposure to the elements to minimise further deterioration.

External wall insulation overcladding systems will provide increased long term protection from further deterioration of the PRC structure and, in addition to improvements in thermal performance, also offer the possibility of improvements in the external aesthetic appearance of the Reema flats blocks.

Areas of existing deterioration, such as cracking and spalling of the window surrounds of PRC wall panels, corner PRC columns and the PRC cover strips at gable end panel joints should be made good prior to overcladding, although it will not be necessary to make good cracking at joints between adjacent wall panels as water ingress will be negated by the application of the proposed overcladding.

This repair method would be suitable to allow the provision of a design solution capable of achieving at least a further 30 years of assured life.

External wall insulation overcladding systems in themselves can be assumed to have a life expectancy of 30 years, (the underlying structures notwithstanding) provided care is taken to repair any damage that may occur and subject to routine maintenance and a mid-life up-lift (often required in our experience) to refresh appearance to ensure that the properties remain watertight.

4.3 Mortgageability

Not withstanding the issues surrounding the mortgageability of shared tenure flats blocks, If repairs to a mortgageable standard were required, the results of the initial screening survey undertaken and the statistically significant higher levels of chloride ion contamination recorded at the Reema flats blocks indicate that these properties will in theory require a full “walls out” repair in accordance with category 4 of NTHAS.

It should be noted however that further testing of the remaining Reema flats blocks would be necessary to confirm this on a block by block basis. Internal concrete components will require testing and replacement with traditional materials where the results fail the criteria for retention in a load bearing capacity within the engineering requirements of NTHAS.

The presence of high levels of carbonation penetration and high chloride content within the concrete as noted in section 4.1 above indicates a long term risk of corrosion of reinforcement within the webs of the PRC hollow panel elements. The effects of chloride induced corrosion may eventually result in cracking of the nibs between the inner and outer skins of the hollow panels and the risk of detachment and loss of structural integrity. The adverse effects of this potential degradation can be mitigated by the adoption of additional remedial tying and corner strapping measures prior to overcladding to strengthen the existing structure and together with the necessary supervision and certification regime by the panel engineer, can be designed to achieve mortgageability, subject as always to the vagaries of the lending policies of individual lenders.

4.4 Thermal improvements

The thermal performance of the Reema flats properties is very poor by present day standards, with low levels of loft insulation observed and poorly insulated external walls punctuated by the regularly spaced PRC ribs resulting in extensive cold bridging.

Owners of unrepaired Reema properties have been tempted to merely insulate the cavities between ribs in the external walls with either foam or blown fibre insulation, rather than applying a proprietary External Wall Insulation (EWI) system to the external PRC wall panels in an attempt to improve the U-value of external walls. This course of action is not recommended as it does not allow for the further protection of the PRC elements nor does it address the issue of the cold bridging inherent in the original constructed form.

Building Regulations and ECO funding criteria requires that the U–value of the external walls be reduced to a maximum of 0.3 W/m^2K Calculations provided by overcladding manufacturers show that this reduction in U-value can be achieved by the addition of 110mm of Expanded Polystyrene Insulation with a protective rendered finish applied to the external envelope of the Reema properties, although other insulated overcladding systems and products are available to achieve the required reduction in U-values.

Given the extent of existing deterioration and the potential for further significant deterioration of the PRC elements observed at the Reema flats properties at Bletchley, the thermal performance of these properties

would be better improved as part of an external wall overcladding designed to present day Building Regulations standards as described above, in conjunction with a top up of existing loft insulation and additional measures such as improved double glazed windows and more thermally efficient boilers and heating systems and controls.

4.5 Budget Costs

The cost of repairs to the identified areas of concrete deterioration should be identified following assessment by a specialist concrete repair contractor. It is likely that the extent of repairs required will be significantly greater that the observed damage to concrete components as areas of repair will have to be cut back enlarged to get back to sound uncorroded steel reinforcement in accordance with the repairs specifications from manufacturers. A considerable element of cost will be attributed to access, particularly to higher floor levels and therefore preliminaries for such repair works are likely to contribute significantly to the overall cost of repairs, although these may be reduced proportionately if the repairs are included as part of the wider package of improvements, corner strapping ,remedial wall tying and overcladding works to the blocks of flats.

The cost of applying an external wall insulation overcladding system will be dependant on the system specified, with manufacturers products typically ranging from between £65 to £100/m2, although costs can be expected to be slightly higher for 4-storey flats than might otherwise be the case for typical semi-detached low-rise housing. The overall cost of such overcladding can be reduced significantly where funding is sought from energy providers as described below.

4.6 ECO Funding

The Reema flats properties by their non-traditional construction are defined as “Hard to Treat” properties and as such these types of measures are eligible for grant funding from energy suppliers within the terms of the governments present Energy Company Obligation (ECO), a follow on from the pervious CESP and CERT schemes.

Michael Dyson Associates Limited are in discussions with the major energy providers and will be able to obtain from them offers for grant funding for the energy savings as a result of the recommended external wall reinstatement works and we would be pleased to discuss this further with Milton Keynes Property Services LLP.

Appendices

Appendix A

Address List

A.1 Address List of Surveyed Reema Flats Blocks

Appendix B

Construction Details

Figure B.1 Reema Hollow Panel Isometric Drawing

Appendix C

Sampling Methodology

C.1 Sampling Methodology and Concrete Deterioration

Appendix D

Tables of Results

D.1 Summary of External Visual Inspections

D.2 Summary of Internal Visual Inspections

D.3 Summary of Cement Content Analysis

D.4 Chloride Content Analysis

D.5 Summary of Chloride Content Analysis

D.6 Summary of Depth of Cover and Carbonation Results

Appendix E

Laboratory Test Certificates

E.1 Nicholls Colton Test Certificates Chloride Ion Content

E.1.1 Ref: 14157/MDA/001

E.2 Nicholls Colton Test Certificates Cement Content

E.2.1 Ref: 14157/MDA/002

Appendix F

Photo Logs

F.1 Elevations of Surveyed Flats Blocks

F.2 General Observations

F.3 Survey Methodology

Appendix G

Defects Location Logs

G.1 External Defects Log

G.2 Locations of External Defects at Norfolk House

G.3 Locations of External Defects at Sawley House

G.4 Locations of External Defects at Stirling House

G.5 Locations of External Defects at Waltham House

G.6 Internal Defects Log

G.7 Locations of Internal Communal Area Defects at Norfolk House

G.8 Locations of Internal Communal Area Defects at Sawley House

G.9 Locations of Internal Communal Area Defects at Stirling House

G.10 Locations of Internal Communal Area Defects at Waltham House

Appendix H

Housing Defects Legislation

H.1 Housing Defects Legislation and Mortgageability

Appendix I

Concrete Repair Specifications and Data Sheets

I.1 Sikagard 550 W Elastic anti carbonation paint – product data sheet

I.2 Sikagard 550 W Elastic anti carbonation paint – safety data sheet

I.3 Sikagard 550 W Elastic anti carbonation paint – EC declaration of conformity

I.4 Weber HB40 Repair Mortar – product data sheet

I.5 Weber HB40 Repair Mortar – safety data sheet

RPS Planning & Development							
Address List & Catalogue							
Surveyed Reema Flats Blocks							
MDA Ref:	Flat Nr	Block	Street	Post Code	Flat (F) Maisonette (M)	Ground Floor Flat (GF) First Floor Flat (FF) Second Floor Flat (SF) Third Floor Flat (TF)	Visual Survey (V) Invasive Survey (I)
Bletchley							
1.1	5	Norfolk House	Essex Close	MK3 7ES	F	[redacted]	V / I
	7	Norfolk House	Essex Close	MK3 7ES	F		
	9	Norfolk House	Essex Close	MK3 7ES	F		
	11	Norfolk House	Essex Close	MK3 7ES	F		
	13	Norfolk House	Essex Close	MK3 7ES	F		
	15	Norfolk House	Essex Close	MK3 7ES	F		
	17	Norfolk House	Essex Close	MK3 7ES	F		
	19	Norfolk House	Essex Close	MK3 7ES	F		
	21	Norfolk House	Essex Close	MK3 7ES	F		
	23	Norfolk House	Essex Close	MK3 7ES	F		
	25	Norfolk House	Essex Close	MK3 7ES	F		
	27	Norfolk House	Essex Close	MK3 7ES	F		
1.2	1	Sawley House	Westminster Drive	MK3 6LQ	F		V / I
	2	Sawley House	Westminster Drive	MK3 6LQ	F		
	3	Sawley House	Westminster Drive	MK3 6LQ	F		
	4	Sawley House	Westminster Drive	MK3 6LQ	F		
	5	Sawley House	Westminster Drive	MK3 6LQ	F		
	6	Sawley House	Westminster Drive	MK3 6LQ	F		
	7	Sawley House	Westminster Drive	MK3 6LQ	F		
	8	Sawley House	Westminster Drive	MK3 6LQ	F		
	9	Sawley House	Westminster Drive	MK3 6LQ	F		
	10	Sawley House	Westminster Drive	MK3 6LQ	F		
	11	Sawley House	Westminster Drive	MK3 6LQ	F		
	12	Sawley House	Westminster Drive	MK3 6LQ	F		
1.3	1	Stirling House	Chetser Close	MK 3 5JZ	F		V/I
	2	Stirling House	Chetser Close	MK3 5JZ	F		
	3	Stirling House	Chetser Close	MK3 5JZ	F		
	4	Stirling House	Chetser Close	MK3 5JZ	F		
	5	Stirling House	Chetser Close	MK3 5JZ	F		
	6	Stirling House	Chetser Close	MK3 5JZ	F		
	7	Stirling House	Chetser Close	MK3 5JZ	F		
	8	Stirling House	Chetser Close	MK3 5JZ	F		
	9	Stirling House	Chetser Close	MK3 5JZ	F		
	10	Stirling House	Chetser Close	MK3 5JZ	F		
	11	Stirling House	Chetser Close	MK3 5JZ	F		
	12	Stirling House	Chetser Close	MK3 5JZ	F		
1.4	1	Waltham House	Whaddon Way	MK3 6NS	F		V / I
	2	Waltham House	Whaddon Way	MK3 6NS	F		
	3	Waltham House	Whaddon Way	MK3 6NS	F		
	4	Waltham House	Whaddon Way	MK3 6NS	F		
	5	Waltham House	Whaddon Way	MK3 6NS	F		
	6	Waltham House	Whaddon Way	MK3 6NS	F		
	7	Waltham House	Whaddon Way	MK3 6NS	F		
	8	Waltham House	Whaddon Way	MK3 6NS	F		
	9	Waltham House	Whaddon Way	MK3 6NS	F		
	10	Waltham House	Whaddon Way	MK3 6NS	F		
	11	Waltham House	Whaddon Way	MK3 6NS	F		
	12	Waltham House	Whaddon Way	MK3 6NS	F		

Table A.1

© Michael Dyson Associates Ltd.

RPS Planning & Development

Construction Details

Construction Details - Reema Hollow Panel PRC Properties

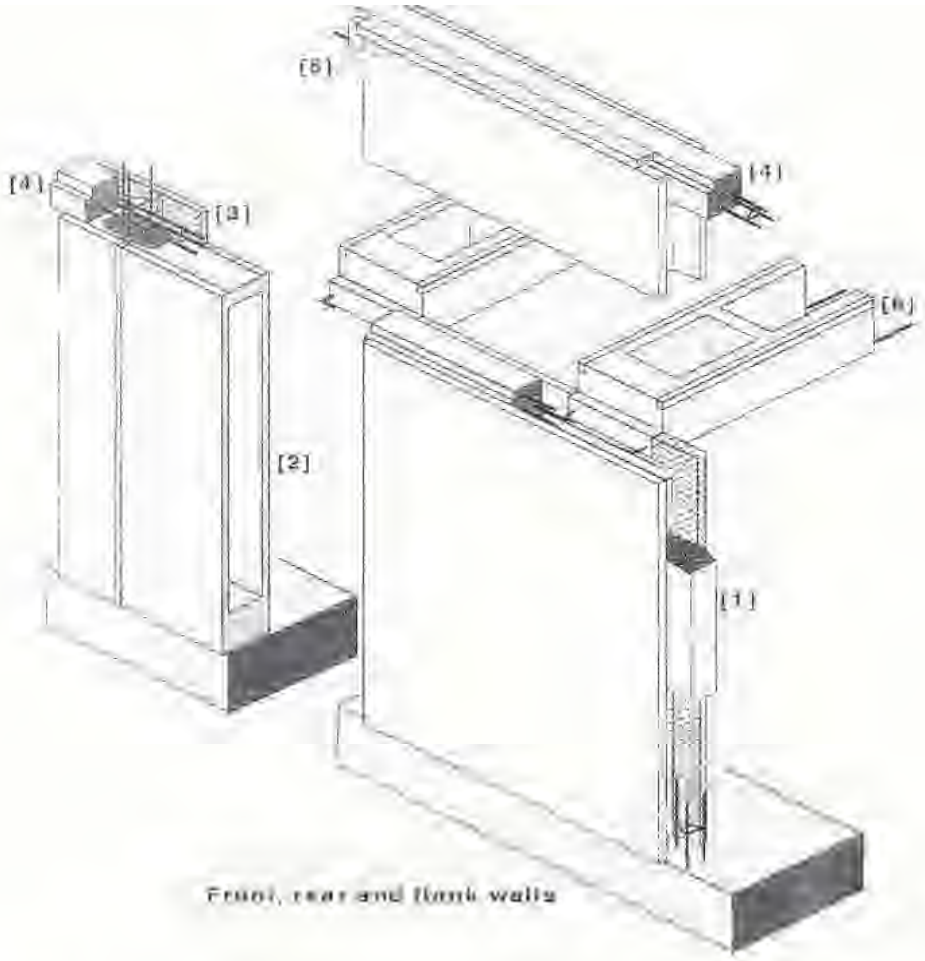

CONSTRUCTION

Substructure: Pad foundations below junction of each panel. Concrete slab.
External walls: RC columns **[1]**, storey height room size dense aggregate hollow PRC panels with internal webs **[2]** with hollow core comprising 1 ½" external leaf, 6 ½" cavity, 4" inner leaf lined with fibreboard **[3]**. RC ring beams **[4]** at first floor and eaves level cast into trough-shaped panel heads. Timber wall plate **[5]**.
Separating wall: Dense aggregate hollow PC panels.
Partitions: PC panels. Some non-load-bearing walls of timber stud lined with plasterboard.
Ground floor: Concrete.
First floor: Timber flooring on timber battens in 10" hollow PC beams **[6]**.
Ceilings: Plasterboard.
Roof: Timber rafters and purlins and concrete tiles or asbestos cement sheets.

VARIANTS

External walls of PRC panels cast with integral window sills.
Flank wall recessed relative to the gables instead of joined flush at corners.
Gable wall formed by abutting triangular panels at wall plate level.
First floor of timber joists on joist hangers.

Figure B.1

© Michael Dyson Associates Ltd.

C.1 Non Traditional Concrete (PRC) Properties

It is estimated that approximately 250,000 Prefabricated Reinforced Concrete houses were constructed in the UK.

Prefabricated reinforced concrete (PRC) houses bear the stigma of being, in large part, "unmortgageable". The Housing Defects Legislation, consolidated in the Housing Act 1985, identified a number of PRC house types as being defective and, thus "blighted". As a result the Building Societies Association and other lenders declined to offer mortgages against them.

The underlying reason for the blight is the potential for rusting and expansion of embedded reinforcement which compromises structural integrity by cracking and spalling of the structural concrete members. Alongside this problem construction details can be poorly arranged, workmanship variable and quality of components inconsistent. Foundations to such housing are by today's standards often shallow and thermal properties invariably fall short of modern expectations.

Non-traditional concrete systems can be subdivided into three broad types distinguished by their main features:-

Type 1: Framed, with outer leaves of brick and other masonry or clad with purpose made blocks and panels.

Within this category there are differences in frame characteristics, width of cavities, methods of connecting frame members, bolted or insitu poured joints and methods of tying of cladding blocks.

Type 2: Large Panel.

This category includes systems comprising storey height precast panels assembled on site, with either bolted or insitu poured concrete connections, forming various horizontal ring beams and vertical columns between panels. Panels may be of hollow, double skinned type or external leaf only, with linings of masonry, plasterboard or similar materials.

A variant of the large panel system is the small panel system, which uses smaller half storey or less type panels or blocks of precast concrete units, either rendered or faced with brick slips or similar claddings.

- This category includes the Reema Flats owned by Milton Keynes Services Partnership LLP.

Type 3: Insitu Concrete.

This category includes a wide variety of insitu built concrete types, often incorporating PRC components such as window lintels, door surrounds and canopies and internal load bearing floor beams.

Weather protection to either solid or cavity outer walls is often provided by render coats, or conventional masonry.

Not all concrete houses have the same potential for degradation. Notwithstanding poor workmanship or localised structural and/or foundation issues, the risk level can be determined by testing for depth of cover, depth of carbonation and chloride content to predict the future lifespan of the structures.

Durability of the concrete load bearing elements is the main concern. Provided chloride levels are low and the concrete is protected from the elements with suitable cladding, and any necessary repairs put in hand and there is no increased risk of condensation by inappropriate rehabilitation, there is no reason why concrete (PRC) dwellings should not give acceptable performance into the foreseeable future and on a par with the life assumed for rehabilitated conventionally constructed dwellings.

C.2 Concrete Deterioration

C.2.1 Introduction

The general mechanisms of concrete decay outlined below have been clearly established over the last fifty years, although before that there was the widespread general feeling that whilst good quality concrete and a generous cover was a good thing, the incorporation of calcium chloride was detrimental to any embedded reinforcement.

A systematic approach to mix design to produce concrete of specified strength only became widely adopted in the 1950's, although it was generally acknowledged before then that minimal water, good aggregate grading to ease compaction and a high cement content would produce stronger concrete. Many precast concrete factories had begun to recognise by the 1950's that concretes with higher cement contents more than justified their greater cost by increasing the rate of use of expensive moulds through rapid strength gain which enabled early de-moulding and handling.

Consequently any concrete member produced before 1950 is an uncertain quantity. Although general 'good practice' would produce a durable concrete, the reasons why this was so were not known, making lapses from the ideal more likely.

C.2.2 Cement Content

Determination of cement content is expensive and, unless original samples of the cement and aggregate used are available, the accuracy is generally poor.

When the chloride content of a drilling dust sample is expressed in terms of cement content, unless the individual dust samples are representative of the concrete as a whole then the determination will not be highly accurate.

Provided, however, the results are evaluated on a statistical basis, this lack of representivity for individual samples does not have a significant effect on the overall outcome of surveys.

Cement content is measured by determination of insoluble residue, soluble silica and calcium oxide for calculation of cement content of concrete in accordance with clause 5.5 of BS1881: Part 124: 1988.

C.2.3 Cover and Carbonation

Concrete is a brittle material which becomes ductile and robust when steel reinforcement is included in it. It is not a solid, rather a mass of solid particles - the aggregates - held together by the crystalline and amorphous products of the chemical reaction between cement - usually Ordinary Portland Cement (OPC) - and water, collectively called the hydrated cement paste. OPC paste is porous and the pores are filled with

excess mixing water saturated with lime and other hydration products in equilibrium with the hydrated cement paste.

Concrete therefore bears some resemblance on a microscopic scale to a damp sponge, but with limewater in the pores. Freshly made concrete is therefore alkaline and steel will not corrode in an alkaline environment because a passive layer is formed on the surface inhibiting further oxidation. Steel and concrete have similar coefficients of thermal expansion, and thus reinforced concrete behaves as a coherent, composite material through a wide range of environmental conditions.

The Earth's atmosphere is acidic, largely due to its carbon dioxide content. From the day it is cast, therefore, the alkalinity of concrete is reduced from the surface, a process called *carbonation*.

Carbonation has little effect on the concrete itself other than to induce a minor shrinkage and to slightly increase its strength. Its most important effect is to remove the corrosion protection to embedded steel conferred by the alkaline pore water, as this becomes neutralised. Once carbonation (which causes a steadily thickening surface skin of neutral concrete) has reached the depth of embedment of the steel, a distance known as the *cover*, the steel can corrode if water and oxygen can reach it.

Rate of carbonation depends on the quality of the original cement paste. A porous paste, associated with weak concrete, made using little cement and too much water is rapidly penetrated by carbon dioxide, and when such concrete is carbonated it provides easy access to the embedded steel for air and water. A dense and strong concrete, made with a well graded aggregate, sufficient cement and little water, and well compacted, has a cement paste that is only slowly carbonated, and when it is, the carbonated paste can still act as a physical barrier, limiting ingress of air and water to the steel.

When steel corrodes, the rust produced occupies many times the volume of parent metal. When this occurs within carbonated concrete, the pressure generated by the growing rust layer cracks and spalls the overlying concrete, leading to direct entry of air and water and ever more rapid corrosion of the steel.

At this point reinforced concrete appears very distressed, although it is still a long way from losing all its strength and ductility.

It should be noted that the process of carbonation followed by reinforcement corrosion produces no visible effect on OPC concrete until corrosion starts. Once cracking has been induced, corrosion damage is rapid and progressive. Thus it is wrong to consider that a small crack in a 40-year old component has taken 40 years to develop and should therefore take many decades to grow into a large crack.

In such a concrete, the corrosion process that produced the small crack may have taken as little as two years since carbonation reached the steel, and another two years of exposure will lead to considerably more visible damage.

Reinforced concrete that is exposed to atmospheric influences will inevitably lose its alkalinity due to this process. Rate of conversion depends on depth of cover, the diffusion rate of carbon dioxide through any protective coatings, porosity and width of cracks of the concrete and the relative humidity

of the atmosphere. Carbonation in an internal environment is more rapid, but is generally of less consequence because an internal domestic environment is rarely wet enough to induce reinforcement corrosion, except in kitchens and bathrooms, where ventilation is less than adequate.

On the exterior of a building, where cover and concrete quality are low, corrosion damage can often be seen within ten years. If cover is normal and concrete quality high the expected serviceable life of reinforced concrete can probably be measured in centuries.

Carbonation depths were determined by spraying the surface of a freshly fractured concrete face with phenolphthalein indicator, which turns un-carbonated cement pastes bright purple. The depth of carbonation, represented by a colourless zone, was measured and recorded.

The cover to the embedded reinforcement was measured directly at each component selected for carbonation penetration testing. The presence, condition and depth of concrete cover to reinforcement were noted in relation to the depth of carbonation penetration.

The presence of steel reinforcement within concrete not tested for carbonation penetration was determined by means of an electronically operated, hand held cover meter. Readings of depth of cover can however be affected by the presence of iron pyrites based aggregates or by foil backed dry lining boards where measurements are taken internally.

C.2.4 Chloride Ion Content

A further and important complicating factor can be presence of chlorides in concrete. In the past calcium chloride was often added to the mix to accelerate the setting reaction. This was seen at the time as advantageous because a faster set allowed a quicker turn-round of moulds in a precast concrete factory and also the rapid evolution of heat could protect fresh concrete from frost damage.

The usage of calcium chloride peaked in the 1950's and early 1960's, after which it was realised that it could induce corrosion of reinforcement by disrupting the passive layer on the steel, before the alkalinity of the cover was lost due to carbonation.

Although the use of calcium chloride is now banned, chloride is still a problem as it is a small and mobile ion that can easily penetrate concrete and marine structures and those subject to de-icing salt can suffer from its actions. There remains a legacy of chloride-contaminated concrete in the nation's building stock.

During the time when use of calcium chloride as an accelerator was considered acceptable, the recommended dosage was about 1% chloride ion per unit weight of cement. Later research by Building Research Establishment (BRE) defined three categories of risk of corrosion in relation to chloride content. Less than 0.4% is regarded as *low* risk, 0.4% - 1.0% is considered *medium* risk and over 1% is held to give a *high* risk of reinforcement corrosion. Although there is as yet no scientific proof, it is now believed that the higher the cement content, the lower is the risk of reinforcement corrosion at a given chloride content. The BRE figures can therefore be thought of as applicable to low and medium strength concrete but pessimistic for high strength concrete.

However, research has also shown why chloride in medium quality concrete is more hazardous then was earlier believed. Its presence, as well as increasing corrosion rate generally, prolongs corrosion during the drying phase of the alternate wetting and drying cycles so typical of weather exposure in Britain.

The overall variability in cement contents for structural concrete is small compared to the percentage differences in threshold values of chloride contamination. Where chloride contents are large or small, their assessment is not much influenced by assumptions about cement content. However, where chloride contents are borderline cement content determinations may be attributed greater significance.

Chloride content is measured by Potentiometric Titration in accordance with BS 1881:Part124:1988, utilising a powdered concrete sample obtained by drilling a hole in the structural member and collecting the dust produced.

Concrete dust samples were taken from a representative sample of the primary structural components and were sent to UKAS accredited laboratory, Nicholls Colton Testing, Leicester, for analysis.

RPS Planning & Development

Tables of Results

Summary of External Visual Inspection

4 Storey Reema Flats Blocks

MDA Ref	Address	Moss Growth to Roof Covering	Blocked Gutters	Patch Repair to PRC Panel	Cracking to PRC Panel	Spalling to PRC Panel	Damaged PRC Panels	Rust Spots to PRC Panel	Staining to PRC Panels	Mortar/Mastic Missing from Panel Joints	Cracking to PRC Window Reveal	Spalling to PRC Window Reveal	Cracking to PRC Door Reveal	Spalling to PRC Door Reveal	Cracking to PRC Door Canopy	Spalling to PRC Door Canopy	Cracking to Concrete Slab Edge	Spalling to Concrete Slab Edge	Bridging of Damp Proof Course (DPC)
Bletchley																			
1.1	Norfolk House	✓	✓	✓	✓	✓	✓	x	✓	✓	x	x	x	x	x	✓	✓	x	✓
1.2	Sawley House	✓	✓	✓	✓	✓	✓	x	✓	x	✓	x	✓	✓	✓	✓	x	✓	x
1.3	Stirling House	✓	x	✓	✓	✓	✓	✓	✓	✓	✓	x	x	x	x	✓	x	x	x
1.4	Waltham House	✓	✓	x	✓	x	x	x	✓	x	✓	✓	x	✓	✓	✓	x	✓	x
Summary		**4**	**3**	**3**	**4**	**3**	**3**	**1**	**4**	**2**	**3**	**1**	**1**	**2**	**2**	**4**	**1**	**2**	**1**

Table D.1

© Michael Dyson Associates Ltd.

RPS Planning & Development

Tables of Results

Summary of Internal Visual Inspections

4 Storey Reema Flats Blocks

MDA Ref	Address	Roofspace											Floors, Walls, Ceiling (Communal Staircase)										
		Access Via Communal Staircase	No Defects Observed within Roofspace	Spilts and Shakes Observed to Timbers	Rotten Timber Observed	Fungal / Insect Attack	Tears to Sarking Felt	Sarking Felt Perished	Leaks to Flashings/Other Areas	Insulation Thickness (mm)	Max. Timber Moisture Content (%)	Inadequate Party Wall Firestop	No Defects Observed to Commmunal Areas	Cracking to PRC Panel	Spalling to PRC Panel	Cracking to Panel Joints	Cracking to Window Surround	Spalling to Window Surround	Cracking to PRC Staircase	Cracking/Heave to Ground Floor Slab	Cracking/Heave to Upper Floors Slab	Condensation/Mould Evident	Penetrating Damp Observed
Bletchley																							
1.1	Norfolk House	✓	x	x	x	x	x	x	x	200	14	✓	x	✓	x	✓	✓	x	x	x	x	x	x
1.2	Sawley House	✓	No Access to Roof										x	✓	x	✓	✓	x	x	x	x	x	x
1.3	Stirling House	✓	x	x	x	x	✓	x	x	100	14	x	x	x	x	✓	✓	x	x	x	x	x	x
1.4	Waltham House	✓	x	x	x	x	x	x	x	150	14	✓	x	✓	x	✓	x	x	x	x	x	x	x
Summary		**4**	**0**	**0**	**0**	**0**	**1**	**0**	**0**	**225**	**14**	**2**	**0**	**3**	**0**	**4**	**3**	**0**	**0**	**0**	**0**	**0**	**0**

Table D.2

RPS Planning & Development			
Tables of Results			
Summary of Reema Flats Cement Content Analysis - Nicholls Colton Test Results			
Component Type	**Cement Conent Using Soluble Silica %**	**Cement Content Using Calcium Oxide %**	**Preferred Cement Content %**
Amalgamation of all PRC Panels (Norfolk, Sawley and Waltham House)	21.1	22.6	21.1
Amalgamation of all In-situ Columns and Ringbeams (Norfolk, Sawley and Waltham House)	18.6	37.3	18.6
Amalgamation of all PRC Panels (Stirling House)	18.8	18.5	18.7
Amalgamation of all In-situ Columns and Ringbeams (Stirling House)	17.7	34.1	17.7
Mean	**20.0**	**28**	**20**

Table D.3

© Michael Dyson Associates Ltd

RPS Planning & Development						
Tables of Results						
REEMA FLATS - CHLORIDE CONTENT ANALYSIS				Nicholls Colton Report Nr. 14157/MDA/001		
Address	Norfolk House			**Area**	Bletchley	
MDA Ref Nr	**Component**	**Location**	**% Chloride Content by Weight of Concrete**	**% Cement Content**	**% Chloride Content by Weight of Cement**	**BRE Classification (Risk of Corrosion)**
01	Column	GF G LH 1	0.006	20	0.03	Low
02	Column	GF G LH 6	0.009	20	0.05	Low
03	Column	GF G RH 6	0.008	20	0.04	Low
04	Column	GF R 2	0.023	20	0.12	Low
05	Ringbeam	GF G LH 2	0.115	20	0.58	Moderate
06	Ringbeam	GF G 3 - 1	0.121	20	0.61	Moderate
07	Ringbeam	GF G 3 - 2	0.162	20	0.81	Moderate
08	Ringbeam	GF G RH 5	0.079	20	0.40	Low
09	Panel	FF G LH 2	0.140	20	0.70	Moderate
10	Panel	GF G LH 2	0.123	20	0.62	Moderate
11	Panel	GF F 1	0.130	20	0.65	Moderate
12	Panel	GF F 2	0.171	20	0.86	Moderate
13	Panel	GF G LH 3	0.111	20	0.56	Moderate
14	Panel	GF G LH Link	0.159	20	0.80	Moderate
15	Panel	GF G RH 4	0.135	20	0.68	Moderate
16	Panel	GF R 2	0.187	20	0.94	Moderate
17	Dividing Panel	GF G LH 1	0.159	20	0.80	Moderate
18	Dividing Panel	FF G LH 1	0.139	20	0.70	Moderate
19	Dividing Panel	GF G 3	0.183	20	0.92	Moderate
20	Dividing Panel	FF G 3	0.216	20	1.08	High
					External NTHAS Category	**4**

Table D.4.1

© Michael Dyson Associates Ltd.

RPS Planning & Development						
Tables of Results						
REEMA FLATS - CHLORIDE CONTENT ANALYSIS				Nicholls Colton Report Nr. 14157/MDA/001		
Address	Sawley House			**Area**	Bletchley	
MDA Ref Nr	**Component**	**Location**	**% Chloride Content by Weight of Concrete**	**% Cement Content**	**% Chloride Content by Weight of Cement**	**BRE Classification (Risk of Corrosion)**
01	Column	GF G LH 3	0.004	20	0.02	Low
02	Column	GF F 2	0.004	20	0.02	Low
03	Column	GF G LH 6	0.007	20	0.04	Low
04	Column	GF G RH 3	0.004	20	0.02	Low
05	Ringbeam	GF G LH 1	0.157	20	0.79	Moderate
06	Ringbeam	GF G LH 2	0.239	20	1.20	High
07	Ringbeam	GF G LH 4	0.063	20	0.32	Low
08	Ringbeam	GF G RH 1	0.101	20	0.51	Moderate
09	Party Wall Panel	GF G LH Mid	0.076	20	0.38	Low
10	Party Wall Panel	FF G LH Mid	0.226	20	1.13	High
11	Party Wall Panel	GF G RH Mid	0.099	20	0.50	Moderate
12	Party Wall Panel	FF G RH Mid	0.114	20	0.57	Moderate
13	Panel	FF G LH 1	0.312	20	1.56	High
14	Panel	FF G LH 2	0.383	20	1.92	High
15	Panel	GF G LH 1	0.105	20	0.53	Moderate
16	Panel	GF G LH 2	0.232	20	1.16	High
17	Panel	GF F 2	0.076	20	0.38	Low
18	Panel	GF G LH 4	0.142	20	0.71	Moderate
19	Panel	GF G RH 2	0.296	20	1.48	High
20	Panel	GF G RH 1	0.033	20	0.17	Low
					External NTHAS Category	**4**

Table D.4.2

© Michael Dyson Associates Ltd.

RPS Planning & Development						
Tables of Results						
REEMA FLATS - CHLORIDE CONTENT ANALYSIS				Nicholls Colton Report Nr. 14157/MDA/001		
Address	Stirling House			**Area**	Bletchley	
MDA Ref Nr	**Component**	**Location**	**% Chloride Content by Weight of Concrete**	**% Cement Content**	**% Chloride Content by Weight of Cement**	**BRE Classification (Risk of Corrosion)**
01	Column	GF G LH 1	0.020	20	0.10	Low
02	Column	GF G LH 7	0.016	20	0.08	Low
03	Column	GF G RH 6	0.018	20	0.09	Low
04	Column	GF R 2	0.018	20	0.09	Low
05	Ringbeam	GF G LH 2	0.047	20	0.24	Low
06	Ringbeam	GF G 3 - 2	0.134	20	0.67	Moderate
07	Ringbeam	GF G 3 - 1	0.136	20	0.68	Moderate
08	Ringbeam	GF G RH 4	0.062	20	0.31	Low
09	Panel	FF G LH 2	0.201	20	1.01	High
10	Panel	GF G LH 2	0.068	20	0.34	Low
11	Panel	GF F 1	0.100	20	0.50	Moderate
12	Panel	GF F 2	0.127	20	0.64	Moderate
13	Panel	GF G LH 4	0.135	20	0.68	Moderate
14	Panel	GF G RH 4	0.090	20	0.45	Low
15	Panel	GF G RH 3	0.183	20	0.92	Moderate
16	Panel	GF R 2	0.181	20	0.91	Moderate
17	Dividing Panel	FF G LH 1	0.089	20	0.45	Moderate
18	Dividing Panel	GF G LH 1	0.381	20	1.91	High
19	Dividing Panel	FF G 3	0.086	20	0.43	Low
20	Dividing Panel	GF G 3	0.250	20	1.25	High
					External NTHAS Category	**4**

Table D.4.3

© Michael Dyson Associates Ltd.

RPS Planning & Development						
Tables of Results						
REEMA FLATS - CHLORIDE CONTENT ANALYSIS				Nicholls Colton Report Nr. 14157/MDA/001		
Address	Waltham House			**Area**	Bletchley	
MDA Ref Nr	**Component**	**Location**	**% Chloride Content by Weight of Concrete**	**% Cement Content**	**% Chloride Content by Weight of Cement**	**BRE Classification (Risk of Corrosion)**
01	Column	GF G RH 4	0.006	20	0.03	Low
02	Column	GF R 2	0.004	20	0.02	Low
03	Column	GF G LH 2	0.010	20	0.05	Low
04	Column	GF G LH 6	0.004	20	0.02	Low
05	Ringbeam	GF G RH 2	0.106	20	0.53	Moderate
06	Ringbeam	GF R 2	0.082	20	0.41	Low
07	Ringbeam	GF G LH 2	0.158	20	0.79	Moderate
08	Ringbeam	GF G LH 5	0.014	20	0.07	Low
09	Party Wall Panel	GF G LH Mid	0.078	20	0.39	Low
10	Party Wall Panel	FF G LH Mid	0.096	20	0.48	Low
11	Party Wall Panel	GF G RH Mid	0.085	20	0.43	Low
12	Party Wall Panel	GF G R Mid	0.083	20	0.42	Low
13	Panel	GF G RH 2	0.177	20	0.89	Moderate
14	Panel	FF G RH 2	0.202	20	1.01	High
15	Panel	GF R 2	0.110	20	0.55	Moderate
16	Panel	FF R 2	0.209	20	1.05	High
17	Panel	GF F 2	0.051	20	0.26	Low
18	Panel	GF F 3	0.107	20	0.54	Moderate
19	Panel	GF G LH 1	0.008	20	0.04	Low
20	Panel	GF G LH 5	0.028	20	0.14	Low
					External NTHAS Category	**4**

Table D.4.4

© Michael Dyson Associates Ltd.

RPS Planning & Development						
Tables of Results						
Summary of Chloride Results						
Component	**Nr Tested**	**Nr Samples Exceeding 1.0% Chloride Ion Content**	**Nr Samples Exceeding 0.6% Chloride Ion Content**	**% Samples Exceeding 0.6% Chloride Ion Content**	**External NTHAS Category**	**NTHAS Category**
4 Storey Reema Flats Blocks at Bletchley						
Panel	32	7	20	62%	4	4
Dividing Panel / Party Wall Panel	16	4	7	44%	4	4
Column	16	0	0	0%	3	3
Ringbeam	16	1	7	44%	4	4
Summary	**80**	**12**	**34**	**58%**	**4**	**4**

Table D.5

RPS Planning & Development

Tables of Results

Summary of Depth of Cover and Carbonation - Reema Flats Blocks

MDA Ref.	Address	Component	Location	Max Depth of Carbonation (mm)	Depth of Cover (mm)*	Carbonation Exceeds Cover	Steel Condition
1.1	Norfolk House	Panel	GF G LH 1	1	30	No	1
		Panel	GF G LH 3	1	35	No	1
		Panel	GF G RH 4	1	30	No	1
		Dividing Panel	GF G LH 1	1	20	No	1
		Dividing Panel	GF G 3	10	30	No	1
		Column	GF G LH 1	1	-	No	-
		Column	GF G LH 6	1	-	No	-
		Column	GF G RH 6	1	-	No	-
Summary			**GF G**	**1**	**30**	**No**	**1**

*By calculation from component dimmensions

Legend - Steel Condition

Condition 0 - Tendon perfect - no corrosion evident.

Condition 1 - Tendon with slight surface corrosion. No visible loss of sound metal at any one cross-section.

Condition 2 - Tendon with surface corrosion and pitting at the onset of visible loss of cross-sectional area of sound metal. Small reduction of tensile strength possible.

Condition 3 - Severely corroded tendon. Estimated 20% or more of area lost at any one cross-section and corresponding reduction of tensile strength.

*1 - No steel exposed; cover depth recorded with meter.

Table D.6.1

© Michael Dyson Associates Ltd.

RPS Planning & Development

Tables of Results

Summary of Depth of Cover and Carbonation - Reema Flats Blocks

MDA Ref.	Address	Component	Location	Max Depth of Carbonation (mm)	Depth of Cover (mm)*	Carbonation Exceeds Cover	Steel Condition
1.2	Sawley House	Panel	GF G LH 2	10	30	No	1
		Party Wall Panel	GF G LH Mid	Fully @ 20	15	Yes	1
		Ringbeam	GF G LH 2	0	30	No	2
		Column	GF G LH 3	0	-	No	-
Summary			**GF G**	**10**	**30**	**No**	**1**

*By calculation from component dimmensions

Legend - Steel Condition

Condition 0 - Tendon perfect - no corrosion evident.

Condition 1 - Tendon with slight surface corrosion. No visible loss of sound metal at any one cross-section.

Condition 2 - Tendon with surface corrosion and pitting at the onset of visible loss of cross-sectional area of sound metal. Small reduction of tensile strength possible.

Condition 3 - Severely corroded tendon. Estimated 20% or more of area lost at any one cross-section and corresponding reduction of tensile strength.

*1 - No steel exposed; cover depth recorded with meter.

Table D.6.2

© Michael Dyson Associates Ltd.

RPS Planning & Development

Tables of Results

Summary of Depth of Cover and Carbonation - Reema Flats Blocks

MDA Ref.	Address	Component	Location	Max Depth of Carbonation (mm)	Depth of Cover (mm)*	Carbonation Exceeds Cover	Steel Condition
1.3	Stirling House	Panel	GF G LH 1	Fully @ 50	25	Yes	*1
		Panel	GF G LH 4	1	30	No	1
		Panel	GF G RH 4	1	35	No	1
		Panel	GF R 2	1	30	No	*1
		Dividing Panel	GF G LH 1	25	25	Yes	2
		Dividing Panel	GF G 3	Fully @ 50	20	Yes	3
		Column	GF G LH 1	1	-	No	-
		Column	GF G LH 7	1	-	No	-
		Column	GF G RH 6	1	-	No	-
		Column	GF R 2	1	-	No	-
Summary			**GF G**	**1**	**30**	**No**	**1**

*By calculation from component dimmensions

Legend - Steel Condition

Condition 0 - Tendon perfect - no corrosion evident.

Condition 1 - Tendon with slight surface corrosion. No visible loss of sound metal at any one cross-section.

Condition 2 - Tendon with surface corrosion and pitting at the onset of visible loss of cross-sectional area of sound metal. Small reduction of tensile strength possible.

Condition 3 - Severely corroded tendon. Estimated 20% or more of area lost at any one cross-section and corresponding reduction of tensile strength.

*1 - No steel exposed; cover depth recorded with meter.

Table D.6.3

© Michael Dyson Associates Ltd.

RPS Planning & Development

Tables of Results

Summary of Depth of Cover and Carbonation - Reema Flats Blocks

MDA Ref.	Address	Component	Location	Max Depth of Carbonation (mm)	Depth of Cover (mm)*	Carbonation Exceeds Cover	Steel Condition
1.4	Waltham House	Panel	GF G RH 2	10	30	No	1
		Panel	GF R 2	30	25	No	*1
		Panel	FF R 2	Fully @ 40	30	Yes	*1
		Panel	GF G LH 2	30	40	No	1
		Column	GF G RH 4	1	-	No	-
		Column	GF R 2	1	-	No	-
Summary			GF G	**20**	**30**	**No**	**1**

*By calculation from component dimmensions

Legend - Steel Condition

Condition 0 - Tendon perfect - no corrosion evident.

Condition 1 - Tendon with slight surface corrosion. No visible loss of sound metal at any one cross-section.

Condition 2 - Tendon with surface corrosion and pitting at the onset of visible loss of cross-sectional area of sound metal. Small reduction of tensile strength possible.

Condition 3 - Severely corroded tendon. Estimated 20% or more of area lost at any one cross-section and corresponding reduction of tensile strength.

*1 - No steel exposed; cover depth recorded with meter.

Table D.6.4

© Michael Dyson Associates Ltd.

Nicholls Colton Analytical
7-11 Harding Street, Leicester, LE1 4DH
Tel: 0116 253 6333. Fax: 0116 251 4709
e-mail: testing@nicholls-colton.co.uk
website: www.nicholls-colton.co.uk

0320

TEST REPORT

BS1881 CHLORIDE CONTENT

RPS Planning and Development

Report no. 14157/MDA/001	
Order reference: 6047	Date of testing: 25 to 26.06.2013
Date of receipt: 21.06.2013	Date of issue: 01.07.2013

NCA sample ref	MDA sample ref	Sample type	Component	Location	**Chloride Ion Content (% by mass of concrete)**	**Chloride Ion Content (% by mass of cement)**
Reema Flats, Norfolk House						
1	01	Concrete Dust	Column	GFG LH 1	**0.006**	**0.04**
2	02	Concrete Dust	Column	GPG LH 6	**0.009**	**0.07**
3	03	Concrete Dust	Column	GFG RH 6	**0.008**	**0.06**
4	04	Concrete Dust	Column	GFR 2	**0.023**	**0.16**
5	05	Concrete Dust	Ringbeam	GFG LH 2	**0.115**	**0.82**
6	06	Concrete Dust	Ringbeam	GFG3-1	**0.121**	**0.87**
7	07	Concrete Dust	Ringbeam	GFG3-2	**0.162**	**1.16**
8	08	Concrete Dust	Ringbeam	GFG RH 5	**0.079**	**0.56**
9	09	Concrete Dust	Panel	FFG LH 2	**0.140**	**1.00**
10	10	Concrete Dust	Panel	GFG LH 2	**0.123**	**0.88**
11	11	Concrete Dust	Panel	GFF 1	**0.130**	**0.93**
12	12	Concrete Dust	Panel	GFF 2	**0.171**	**1.22**
13	13	Concrete Dust	Panel	GFG LH 3	**0.111**	**0.79**
14	14	Concrete Dust	Panel	GFG LH Lint	**0.159**	**1.13**
15	15	Concrete Dust	Panel	GFG RH 4	**0.135**	**0.97**
16	16	Concrete Dust	Panel	GFR 2	**0.187**	**1.34**

14157/MDA/001

NCA sample ref	MDA sample ref	Sample type	Component	Location	**Chloride Ion Content (% by mass of concrete)**	**Chloride Ion Content (% by mass of cement))**
Reema Flats, Norfolk House						
17	17	Concrete Dust	Dividing Panel	GFG LH 1	**0.159**	**1.14**
18	18	Concrete Dust	Dividing Panel	GFG LH 1	**0.139**	**0.99**
19	19	Concrete Dust	Dividing Panel	GFG 3	**0.183**	**1.31**
20	20	Concrete Dust	Dividing Panel	FFG 3	**0.216**	**1.54**
Reema Flats, Sawley House						
21	01	Concrete Dust	Column	GF G LH 3	**<0.004**	**<0.03**
22	02	Concrete Dust	Column	GF F 2	**<0.004**	**<0.03**
23	03	Concrete Dust	Column	GF G LH 6	**0.007**	**0.05**
24	04	Concrete Dust	Column	GF G RH	**<0.004**	**<0.03**
25	05	Concrete Dust	Ring Beam	GF G LH 1	**0.157**	**1.12**
26	06	Concrete Dust	Ring Beam	GF G LH 2	**0.239**	**1.71**
27	07	Concrete Dust	Ring Beam	GF G LH 4	**0.063**	**0.45**
28	08	Concrete Dust	Ring Beam	GF G RH 1	**0.101**	**0.72**
29	09	Concrete Dust	Dividing	GF G LH Mid	**0.076**	**0.54**
30	10	Concrete Dust	Dividing	FF G LH Mid	**0.226**	**1.62**
31	11	Concrete Dust	Dividing	GF G RH Mid	**0.099**	**0.70**
32	12	Concrete Dust	Dividing	FF G RH Mid	**0.114**	**0.81**
33	13	Concrete Dust	Panel	FF G LH 1	**0.312**	**2.23**
34	14	Concrete Dust	Panel	FF G LH 2	**0.383**	**2.74**
35	15	Concrete Dust	Panel	GF G LH 1	**0.105**	**0.75**
36	16	Concrete Dust	Panel	GF G LH 2	**0.232**	**1.66**
37	17	Concrete Dust	Panel	GF F2	**0.076**	**0.54**
38	18	Concrete Dust	Panel	GF G LH 4	**0.142**	**1.01**
39	19	Concrete Dust	Panel	GF G RH 2	**0.296**	**2.11**
40	20	Concrete Dust	Panel	GF G RH 1	**0.033**	**0.24**

14157/MDA/001

NCA sample ref	MDA sample ref	Sample type	Component	Location	**Chloride Ion Content (% by mass of concrete)**	**Chloride Ion Content (% by mass of cement)**
Reema Flats, Stirling House						
41	01	Concrete Dust	Column	GFG LH1	**0.020**	**0.15**
42	02	Concrete Dust	Column	GFG LH 7	**0.016**	**0.11**
43	03	Concrete Dust	Column	GFG RH 6	**0.018**	**0.13**
44	04	Concrete Dust	Column	GF R 2	**0.018**	**0.13**
45	05	Concrete Dust	Ringbeam	GFG LH 2	**0.047**	**0.34**
46	06	Concrete Dust	Ringbeam	GFG 3-2	**0.134**	**0.96**
47	07	Concrete Dust	Ringbeam	GFG 3-1	**0.136**	**0.97**
48	08	Concrete Dust	Ringbeam	GF G RH 4	**0.062**	**0.44**
49	09	Concrete Dust	Panel	FFG LH 2	**0.201**	**1.43**
50	10	Concrete Dust	Panel	GFG LH 2	**0.068**	**0.49**
51	11	Concrete Dust	Panel	GF F 1	**0.100**	**0.71**
52	12	Concrete Dust	Panel	GF F 2	**0.127**	**0.91**
53	13	Concrete Dust	Panel	GFG LH 4	**0.135**	**0.97**
54	14	Concrete Dust	Panel	GF G RH 4	**0.090**	**0.64**
55	15	Concrete Dust	Panel	GF G RH 3	**0.183**	**1.31**
56	16	Concrete Dust	Panel	GF R 2	**0.181**	**1.29**
57	17	Concrete Dust	Dividing Panel	FF G LH 1	**0.089**	**0.64**
58	18	Concrete Dust	Dividing Panel	GF G LH 1	**0.381**	**2.72**
59	19	Concrete Dust	Dividing Panel	FF G 3	**0.086**	**0.62**
60	20	Concrete Dust	Dividing Panel	GFG 3	**0.250**	**1.78**
Reema Flats, Waltham House						
61	01	Concrete Dust	Column	GF G RH 4	**0.006**	**0.04**
62	02	Concrete Dust	Column	GF R2	**<0.004**	**<0.03**
63	03	Concrete Dust	Column	GF G LH 2	**0.010**	**0.07**
64	04	Concrete Dust	Column	GF G LH 6	**0.004**	**0.03**
65	05	Concrete Dust	Ring Beam	GF G RH 2	**0.106**	**0.75**
66	06	Concrete Dust	Ring Beam	GF R2	**0.082**	**0.59**
67	07	Concrete Dust	Ring Beam	GF G LH 2	**0.158**	**1.13**
68	08	Concrete Dust	Ring Beam	GF G LH 5	**0.014**	**0.10**
69	09	Concrete Dust	Dividing Panel	GF G LH Mid	**0.078**	**0.56**
70	10	Concrete Dust	Dividing Panel	GF G LH Mid	**0.096**	**0.69**

14157/MDA/001

NCA sample ref	MDA sample ref	Sample type	Component	Location	**Chloride Ion Content (% by mass of concrete)**	**Chloride Ion Content (% by mass of cement)**
Reema Flats, Waltham House						
71	11	Concrete Dust	Dividing Panel	GF G RH Mid	**0.085**	**0.61**
72	12	Concrete Dust	Dividing Panel	GF G R Mid	**0.083**	**0.59**
73	13	Concrete Dust	Panel	GF G RH 2	**0.177**	**1.27**
74	14	Concrete Dust	Panel	GF G RH 2	**0.202**	**1.44**
75	15	Concrete Dust	Panel	GF R2	**0.110**	**0.79**
76	16	Concrete Dust	Panel	FF R2	**0.209**	**1.49**
77	17	Concrete Dust	Panel	GF F2	**0.051**	**0.36**
78	18	Concrete Dust	Panel	GF F3	**0.107**	**0.76**
79	19	Concrete Dust	Panel	GF G LH 1	**0.008**	**0.06**
80	20	Concrete Dust	Panel	GF G LH 5	**0.028**	**0.20**

NOTES:
1. Testing was in accordance with BS 1881: Part 124: 1988 Clause 10.2 using potentiometric titration.
2. A cement content of 14% was used in the calculation of chloride ion content.
3. Samples received were smaller than required by Clause 3.2 BS 1881 : Part 124 : 1988.
4. Samples were not passed over the 150micron BS Test Sieve before testing.
5. Quality control samples are tested with each batch of samples.

.....

[redacted]
Manager - Data Logistics
Nicholls Colton Analytical

Michael Dyson Associates Ltd
West House
Meltham Road
Honley
Holmfirth
West Yorkshire
HD9 6LB

0320

Nicholls Colton Analytical
7-11 Harding Street, Leicester, LE1 4DH
Tel: 0116 253 6333. Fax: 0116 251 4709
e-mail: testing@nicholls-colton.co.uk
website: www.nicholls-colton.co.uk

TEST REPORT

BS1881 CEMENT CONTENT

7551 RPS Planning & Development Milton Keynes

Report no. 14157/MDA/002	
Order reference: 6047	Date of testing: 26/06/2013 to 27/06/2013
Date of receipt: 21/06/2013	Date of issue: 01/07/2013

NCA sample reference:	Client sample identification	Grid point/ Test area:	Sample type	Cement content by SiO_2 content (% m/m)	Cement content by CaO content (% m/m)	**Preferred (P) / Mean (M) Cement Content (% m/m)**
13-14008	Cement 1	Norfolk, Sawley and Waltham (In-situ)	Concrete Dust Amalgamation	18.6	37.3	**18.6 (P)**
13-14009	Cement 2	Norfolk, Sawley and Waltham (PCR)	Concrete Dust Amalgamation	21.1	22.6	**21.1 (P)**
13-14010	Cement 3	Stirling (In-situ)	Concrete Dust Amalgamation	17.7	34.1	**17.7 (P)**
13-14011	Cement 4	Stirling (PCR)	Concrete Dust Amalgamation	18.8	18.5	**18.7 (M)**

NOTES:
1. Testing was in accordance with BS 1881: Part 124: 1988 Clause 5 by ICP.
2. Cement content has been calculated assuming the presence in the concrete of Ordinary Portland Cement, containing 20.2% and 64.5% by mass of soluble silica and calcium oxide respectively.
3. Samples of the original constituents of the mix were not submitted.
4. Samples received were smaller than required by Clause 3.2, BS 1881: Part 124: 1988.
5. Quality control samples are tested with each batch of samples.
6. Duplicate tests are carried out/Samples were identified as being part of a batch and therefore the results are from a single analysis only.

.....

Manager – Data Logistics
Nicholls Colton Analytical

Michael Dyson Associates
West House
Meltham Road
Honley
Holmfirth
West Yorkshire
HD9 6LB

F.1 Elevations of Surveyed Flats Blocks

Reema Flats Blocks

Photograph 1:
Norfolk House, Front Elevation.

Photograph 2:
Norfolk House, LH Gable Elevation.

Photograph 3:
Norfolk House, RH Gable Elevation.

Photograph 4:
Sawley House, Front Elevation.

© Michael Dyson Associates Ltd.

F.1 Elevations of Surveyed Flats Blocks Continued

Reema Flats Blocks Continued

Photograph 5:
Sawley House, LH Gable Elevation.

Photograph 6:
Sawley House, RH Gable Elevation.

Photograph 7:
Stirling House, Front Elevation.

Photograph 8:
Stirling House, LH Gable Elevation.

© Michael Dyson Associates Ltd.

F.1 Elevations of Surveyed Flats Blocks Continued

Reema Flats Blocks Continued

Photograph 9:
Stirling House, RH Gable Elevation.

Photograph 10:
Waltham House, Front Elevation.

Photograph 11:
Waltham House, LH Gable Elevation.

Photograph 12:
Waltham House, RH Gable Elevation.

© Michael Dyson Associates Ltd.

F.2 General Observations

Norfolk House

Photograph 1:
Typical roof construction showing traditional sawn timber rafters and purlins to be in satisfactory condition.

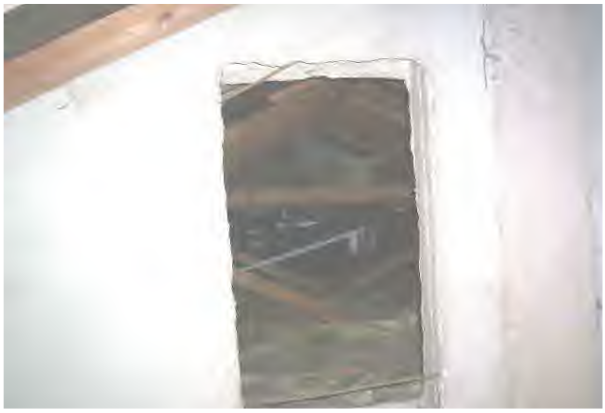

Photograph 2:
Access door in PRC party wall panel in roof space above communal area causing defective fire stop between flats.

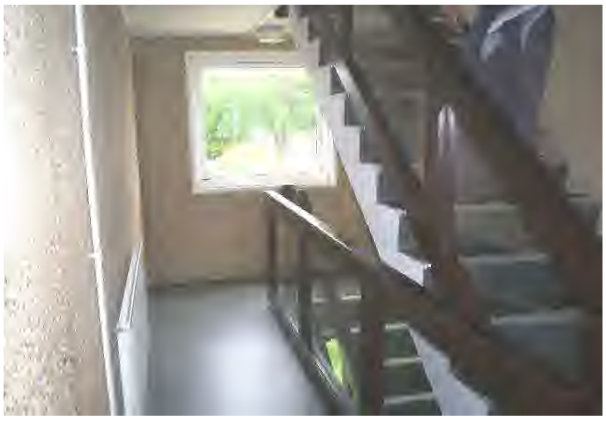

Photograph 3:
Typical communal entrance staircase to Norfolk House. Note internal PRC panels between flats.

Photograph 4:
Defect Type 1 - Cracking observed to panel joints in communal staircase area.

© Michael Dyson Associates Ltd.

F.2 General Observations Continued

Norfolk House Continued

Photograph 5:
Defect Type 2 - Cracking to panel observed in communal staircase area.

Photograph 6:
Defect Type 3 - Cracking observed to panel between windows in link section.

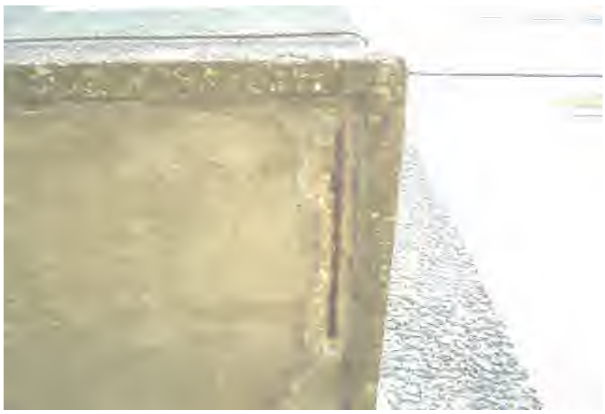

Photograph 7:
Defect Type H - Spalling to PRC front door canopy observed, showing steel reinforcement visible and corroding.

Photograph 8:
Defect Type M - Damaged PRC panel observed at previously installed boiler flue.

© Michael Dyson Associates Ltd.

F.2 General Observations Continued

Norfolk House Continued

Photograph 9:
Defect Type A - Cracking observed to PRC panel externally.

Photograph 10:
Defect Type B – Spalling observed to PRC panel.

Photograph 11:
Defect Type C - Staining observed to PRC panels.

Photograph 12:
Carbonation test to PRC panel showing minimal carbonation present and steel reinforcement to be in satisfactory condition.

© Michael Dyson Associates Ltd.

F.2 General Observations Continued

Norfolk House Continued

Photograph 13:
Defect Type I - Cracking observed to concrete slab edge.

Photograph 14:
Defect Type K - Ground level observed bridging damp proof course.

Sawley House

Photograph 15:
Typical communal entrance staircase area to Sawley House. Note internal PRC panels between flats.

Photograph 16:
Defect Type 1 - Cracking observed to panel joints in communal staircase area.

© Michael Dyson Associates Ltd.

F.2 General Observations Continued

Sawley House Continued

Photograph 17:
Defect Type H - Spalling observed to PRC front door canopy.

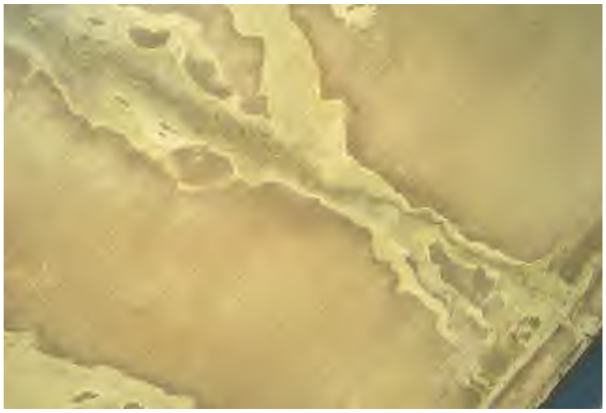

Photograph 18:
Defect Type G - Cracking observed to PRC front door canopy.

Photograph 19:
Defect Type A - Cracking observed to external PRC panel.

Photograph 20:
Defect Type E - Cracking observed to external PRC panel at window surround.

© Michael Dyson Associates Ltd.

F.2 General Observations Continued

Sawley House Continued

Photograph 21:
Defect Type N - Cracking observed to external PRC panel at door reveal.

Photograph 22:
Defect Type O - Spalling observed to external PRC panel at door reveal. Note steel reinforcement to be exposed and corroding.

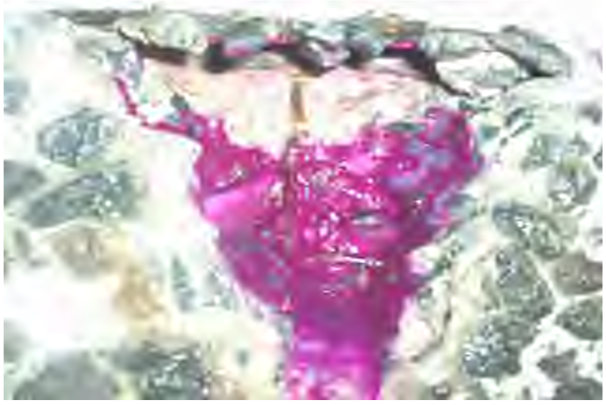

Photograph 23:
Carbonation test to PRC panel showing minimal carbonation present and steel reinforcement to be in satisfactory condition.

Photograph 24:
Defect Type C - Staining observed to external PRC panels.

© Michael Dyson Associates Ltd.

F.2 General Observations Continued

Stirling House

Photograph 25:
Defect Type J - Cracking and spalling observed to concrete slab edge.

Photograph 26:
Typical roof construction showing traditional sawn timber rafters and purlins to be in satisfactory condition.

Photograph 27:
Gaps observed around purlins in PRC panel causing defective party wall fire stop.

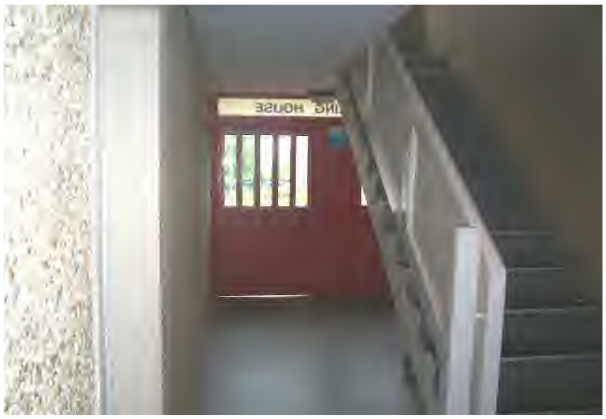

Photograph 28:
Typical communal entrance staircase area.

© Michael Dyson Associates Ltd.

F.2 General Observations Continued

Stirling House Continued

Photograph 29:
Defect Type 3 - Cracking to window reveal observed to communal staircase area.

Photograph 30:
Defect Type 1 - Cracking observed to panel joints in communal staircase area.

Photograph 31:
Defect Type H - Spalling observed to PRC door canopy.

Photograph 32:
Defect Type A - Cracking observed to dividing panel on gable elevations.

© Michael Dyson Associates Ltd.

F.2 General Observations Continued

Stirling House Continued

Photograph 33:
Defect Type R - Previous patch repairs observed to dividing panel on gable elevations.

Photograph 34:
Defect Type A - Cracking observed to external PRC panel.

Photograph 35:
Defect Type B - Spalling observed to external PRC panel.

Photograph 36:
Defect Type D - Mortar / mastic observed missing from panel joints.

© Michael Dyson Associates Ltd.

F.2 General Observations Continued

Stirling House Continued

Photograph 37:
Carbonation test showing PRC panel to be fully carbonated and steel reinforcement to be corroding.

Photograph 38:
Carbonation test to PRC panel showing minimal carbonation present and steel reinforcement to be corroding.

Photograph 39:
Defect Type Q - Rust spotting visible to external PRC panels.

Photograph 40:
Defect Type C - Staining observed to external PRC panels.

© Michael Dyson Associates Ltd.

F.2 General Observations Continued

Stirling House Continued

Photograph 41:
Defect Type J - Cracking and spalling observed to concrete slab edge.

Waltham House

Photograph 42:
Access door in PRC party wall panel in roof space above communal area causing defective fire stop between flats.

Photograph 43:
Typical communal entrance staircase to Waltham House. Note internal PRC panels between flats.

Photograph 44:
Defect Type 2 - Cracking to panel observed in communal staircase area.

© Michael Dyson Associates Ltd.

F.2 General Observations Continued

Waltham House Continued

Photograph 45:
Defect Type 2 - Cracking to panel observed in communal staircase area.

Photograph 46:
Defect Type H – Spalling Observed to PRC concrete door canopy.

Photograph 47:
Defect Type G – Cracking to concrete door canopy.

Photograph 48:
Defect Type E – Cracking observed to PRC panel window reveal.

© Michael Dyson Associates Ltd.

F.2 General Observations Continued

Waltham House Continued

Photograph 49:
Defect Type O – Spalling observed to PRC door reveal.

Photograph 50:
Carbonation test showing minimal carbonation present to PRC and In-situ components.

Photograph 51:
Defect Type C – Staining observed to PRC panels.

Photograph 52:
Defect Type J – Spalling observed to concrete slab edge.

© Michael Dyson Associates Ltd.

F.3 Survey Methodology

Photograph 1:
MDA Surveyor using electronic cover meter to locate and record depth of steel reinforcement.

Photograph 2:
MDA surveyor obtaining concrete dust sample for chloride analysis.

Photograph 3:
MDA surveyor breaking out PRC panel to check condition of steel reinforcement.

Photograph 4:
MDA surveyor using chemical indicator Phenol to check carbonation levels within concrete componets.

© Michael Dyson Associates Ltd.

RPS PLANNING & DEVELOPMENT			
Elevation & Plan Drawings			
External Defects Log			
House Type	4 Storey Reema Flats Blocks	**Site**	Bletchley
Defect	**Description of Defect**		
A	Cracking to PRC Panel		
B	Spalling to PRC Panel		
C	Staining to PRC Panel		
D	Mortar Missing from Panel Joints		
E	Cracking to PRC Window Reveal		
F	Spalling to PRC Window Reveal		
G	Cracking to Door Canopy		
H	Spalling to Door Canopy		
I	Cracking to Concrete Slab Edge		
J	Spalling to Concrete Slab Edge		
K	Bridging of DPC		
L	Blocked Gutters		
M	Damaged PRC Panel		
N	Cracking to PRC Door Reveal		
O	Spalling to PRC Door Reveal		
P	Moss Growth to Roof Covering		
Q	Rust Spots to PRC Panel		
R	Patch Repairs to PRC Panels		

Table G.1

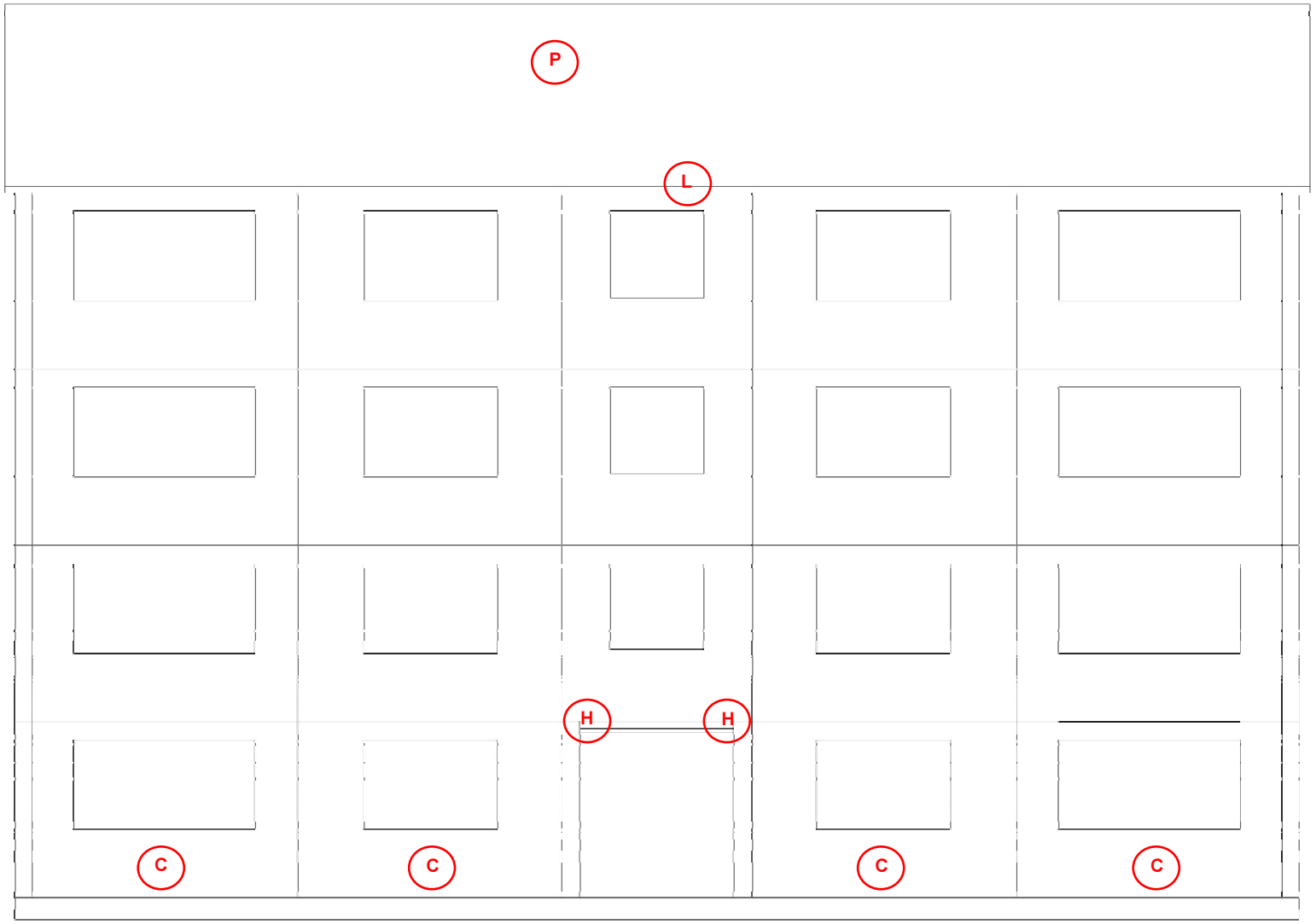

FRONT ELEVATION

Do not scale from this drawing.
All dimensions must be checked on site by the Contractor prior to the commencement of any fabrication or building works.
Where applicable, dimensions and detail are to be read in conjunction with specialist consultants/drawings and/or other specifications, any discrepancy to be brought to the attention of Michael Dyson Associates Limited prior to the commencement of any fabrication or building works.
©This drawing is the property and copyright of Michael Dyson Associates Limited, it shall not be copied to any other party without the express written consent of an authorised director of Michael Dyson Associates Limited.

NOTES

Refer to Appendix G.1 for External Defects Log.

REV	DATE	AMENDMENTS	BY	APPD

Michael Dyson associates ltd
Excellence in Housing Consultancy
West House, Meltham Road, Honley,
Huddersfield HD9 6LB
t. 01484 666666 f. 01484 664166
w. www.mdyson.co.uk

CLIENT :
RPS PLANNING & DEVELOPMENT

PROJECT :
STRUCTURAL SURVEY FOR 4NR REEMA FLATS BLOCKS IN MILTON KEYNES

TITLE :
TYPICAL EXISTING FRONT ELEVATION NORFOLK HOUSE

DRAWN BY :	GM	APPROVED BY :	
DATE :	25/06/2013	DATE :	
SCALE :	1:50	ORIGINAL DRAWING SIZE	841 x 594 - A1
DRAWING NO :	301-(REEMA)-7551	REV :	

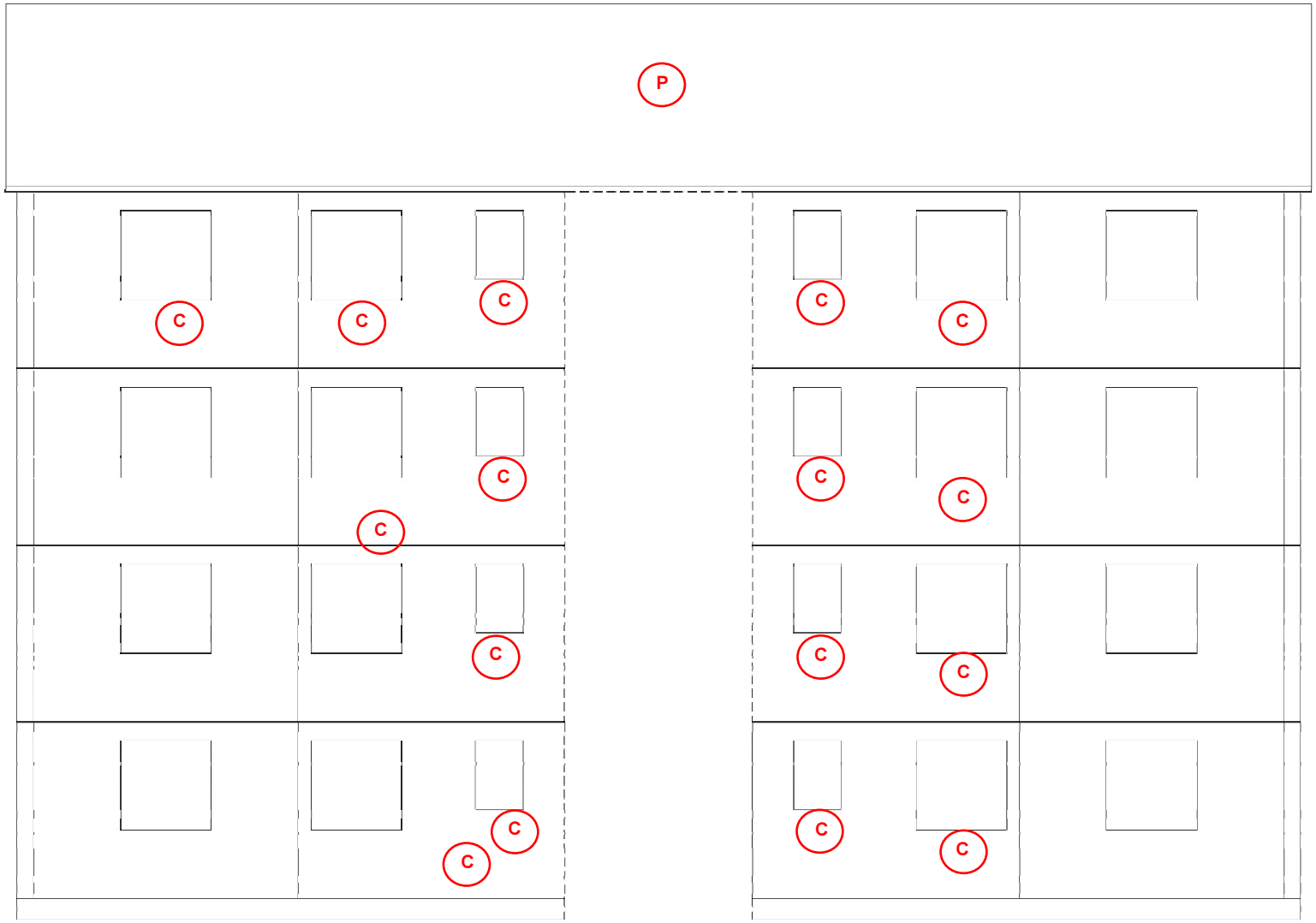

REAR ELEVATION

Do not scale from this drawing.
All dimensions must be checked on site by the Contractor prior to the commencement of any fabrication or building works.
Where applicable, dimensions and details are to be read in conjunction with specialist consultants' drawings under other specifications, any dispatch is to be brought to the attention of Michael Dyson Associates Limited prior to the commencement of any fabrication or building works.
©This drawing is the property and copyright of Michael Dyson Associates Limited; it shall not be copied to any other party without the express written consent of an authorised director of Michael Dyson Associates Limited.

NOTES

Refer to Appendix G.1 for External Defects Log.

REV	DATE	AMENDMENTS	BY	APPD

Michael Dyson associates ltd
Excellence in Housing Consultancy
West House, Maltham Road, Honley,
Huddersfield HD9 6LB
t. 01484 666888 f. 01484 664186
w. www.mdyson.co.uk

CLIENT :

RPS PLANNING & DEVELOPMENT

PROJECT :

STRUCTURAL SURVEY FOR 4NR REEMA FLATS BLOCKS IN MILTON KEYNES

TITLE :

TYPICAL EXISTING REAR ELEVATION NORFOLK HOUSE

DRAWN BY :	SM	APPROVED BY :	
DATE :	3/06/2013	DATE :	
SCALE :	1:20	ORIGINAL DRAWING SIZE SA1 x SS4 - A1	
DRAWING NO. :	302-(REEMA)-7551	REV	

RH GABLE ELEVATION

Do not scale from this drawing.
All dimensions must be checked on site by the Contractor prior to the commencement of any fabrication or building works.
Where applicable dimensions and details are to be read in conjunction with specialist consultants' drawings and/or other specifications, any disparity is to be brought to the attention of Michael Dyson Associates Limited prior to the commencement of any fabrication or build ingwerks.
©This drawing is the property and copyright of Michael Dyson Associates Limited. It shall not be copied to any other party without the express written consent of an authorised director of Michael Dyson Associates Limited.

NOTES

Refer to Appendix G.1 for External Defects Log.

REV	DATE	AMENDMENTS	BY	APPD

Michael Dyson associates ltd
Excellence in Housing Consultancy
West House, Meltham Road, Honley,
Huddersfield HD9 6LB
t. 01484 666888 f. 01484 664188
w. www.mdyson.co.uk

CLIENT :
RPS PLANNING & DEVELOPMENT

PROJECT :
STRUCTURAL SURVEY FOR 4NR REEMA FLATS BLOCKS IN MILTON KEYNES

TITLE :
TYPICAL EXISTING RH GABLE ELEVATION NORFOLK HOUSE

DRAWN BY :	SM	APPROVED BY :	
DATE :	23/09/2013	DATE :	
SCALE :	1:50	ORIGINAL DRAWING SIZE: 841 x 594 - A1	
DRAWING NO :	304-(REEMA)-7551	REV :	

LH GABLE ELEVATION

Do not scale from this drawing.
All dimensions must be checked on site by the Contractor prior to the commencement of any fabrication or building works.
Where applicable, dimensions and details are to be read in conjunction with specialist consultants' drawings and/or other specifications; any disparity is to be brought to the attention of Michael Dyson Associates Limited prior to the commencement of any fabrication or building works.
©This drawing is the property and copyright of Michael Dyson Associates Limited; it shall not be copied to any other party without the express written consent of an authorised director of Michael Dyson Associates Limited.

NOTES

Refer to Appendix G.1 for External Defects Log.

REV	DATE	AMENDMENTS	BY	APPD

Michael Dyson associates ltd
Excellence in Housing Consultancy
West House, Meltham Road, Henley,
Huddersfield HD9 5LB
t. 01484 666888 f. 01484 664188
w. www.mdyson.co.uk

CLIENT :
RPS PLANNING & DEVELOPMENT

PROJECT :
STRUCTURAL SURVEY FOR 4NR REEMA FLATS BLOCKS IN MILTON KEYNES

TITLE :
TYPICAL EXISTING LH GABLE ELEVATION NORFOLK HOUSE

DRAWN BY :	SM	APPROVED BY :	
DATE :	25/05/2013	DATE :	
SCALE :	1:50	ORIGINAL DRAWING SIZE 841 x 594 - A1	
DRAWING No :	303-(REEMA)-7551	REV :	

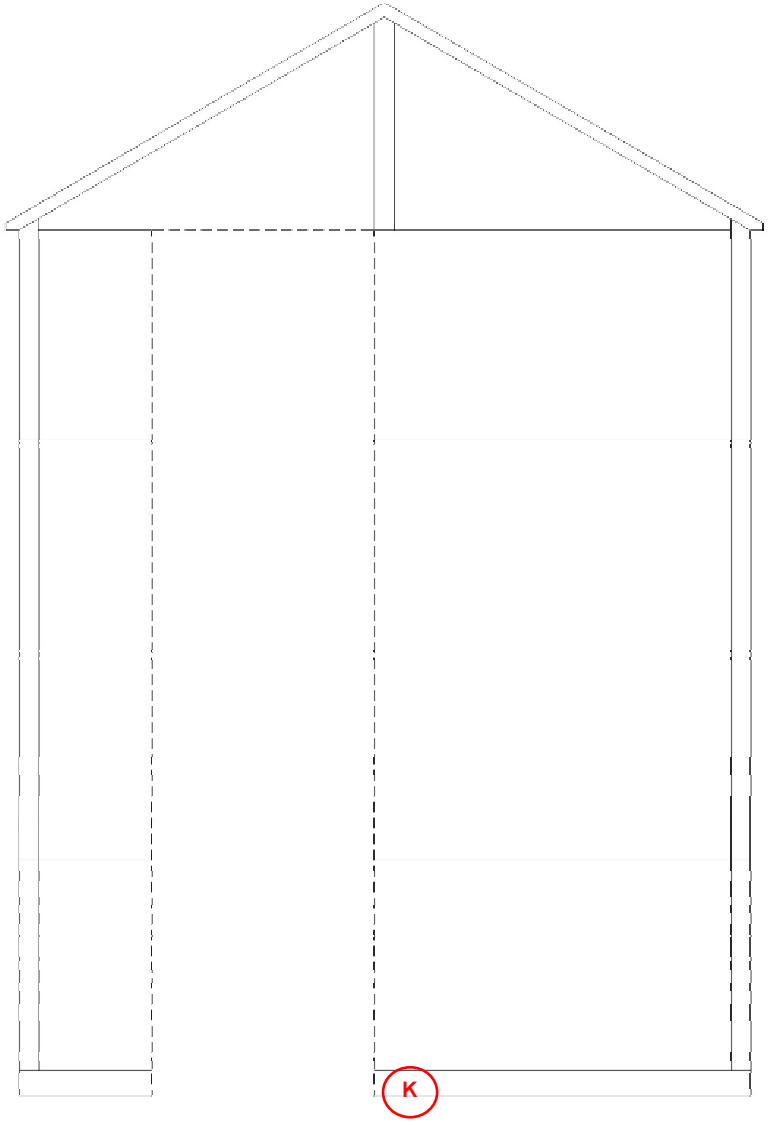

LINK GABLE ELEVATION

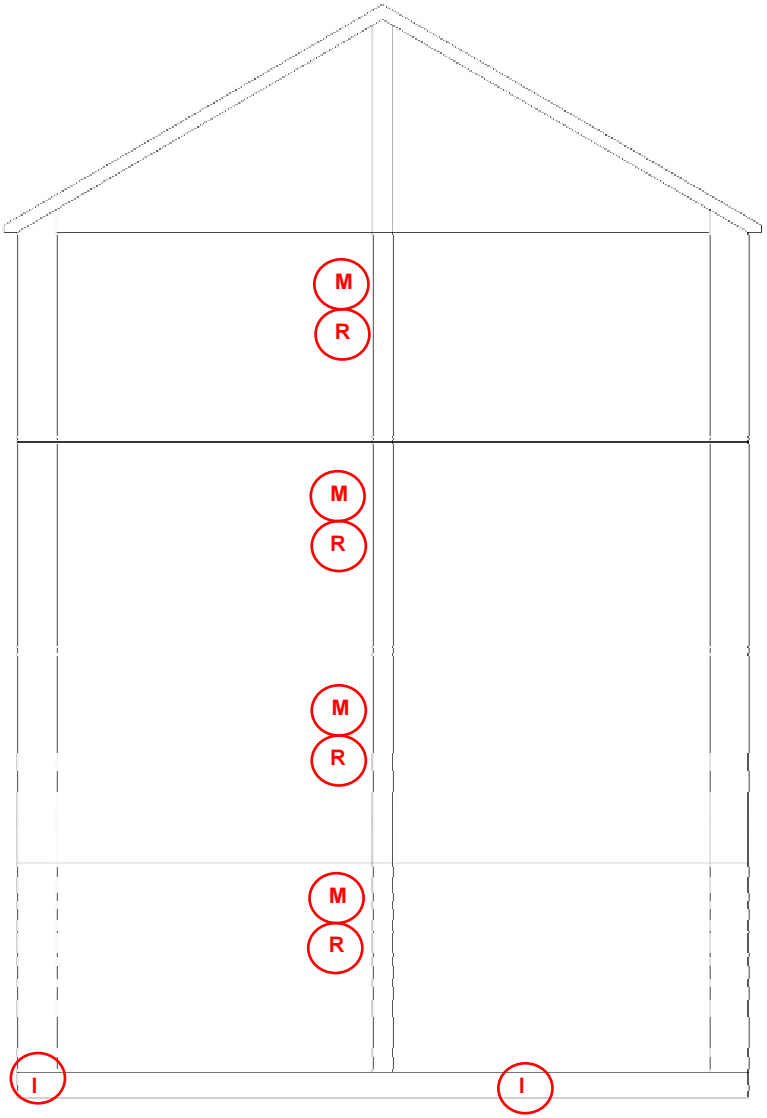

REAR LINK GABLE ELEVATION

Do not commence this drawing.
All dimensions must be checked on site by the Contractor prior to the commencement of any fabrication or building works.
All are approximate, dimensions and details are to be read in conjunction with special consultants' drawings and/or other specified documents. Any discrepancy to be brought to the attention of Michael Dyson Associates Limited prior to the commencement of any fabrication or building works.
©This drawing is the property and copyright of Michael Dyson Associates Limited. It shall not be copied to any other party without the express written consent of an authorised director of Michael Dyson Associates Limited.

NOTES:

Refer to Appendix G.1 for External Defects Log.

REV	DATE	AMENDMENTS	BY	APPD

Michael Dyson associates ltd
Excellence in Housing Consultancy
West House, Meltham Road, Honley,
Huddersfield HD9 6LB
t. 01484 666888 f. 01484 684186
w. www.mdyson.co.uk

CLIENT :
RPS PLANNING & DEVELOPMENT

PROJECT :
STRUCTURAL SURVEY FOR 4NR REEMA FLATS BLOCKS IN MILTON KEYNES

TITLE :
TYPICAL EXISTING LINK GABLE ELEVATIONS NORFOLK HOUSE

DRAWN BY :	SM	APPROVED BY :	
DATE :	2006/2012	DATE :	
SCALE :	1:30	ORIGINAL DRAWING SIZE: SA1 = 594 - A1	
DRAWING No.	305-(REEMA)-7551	REV.	

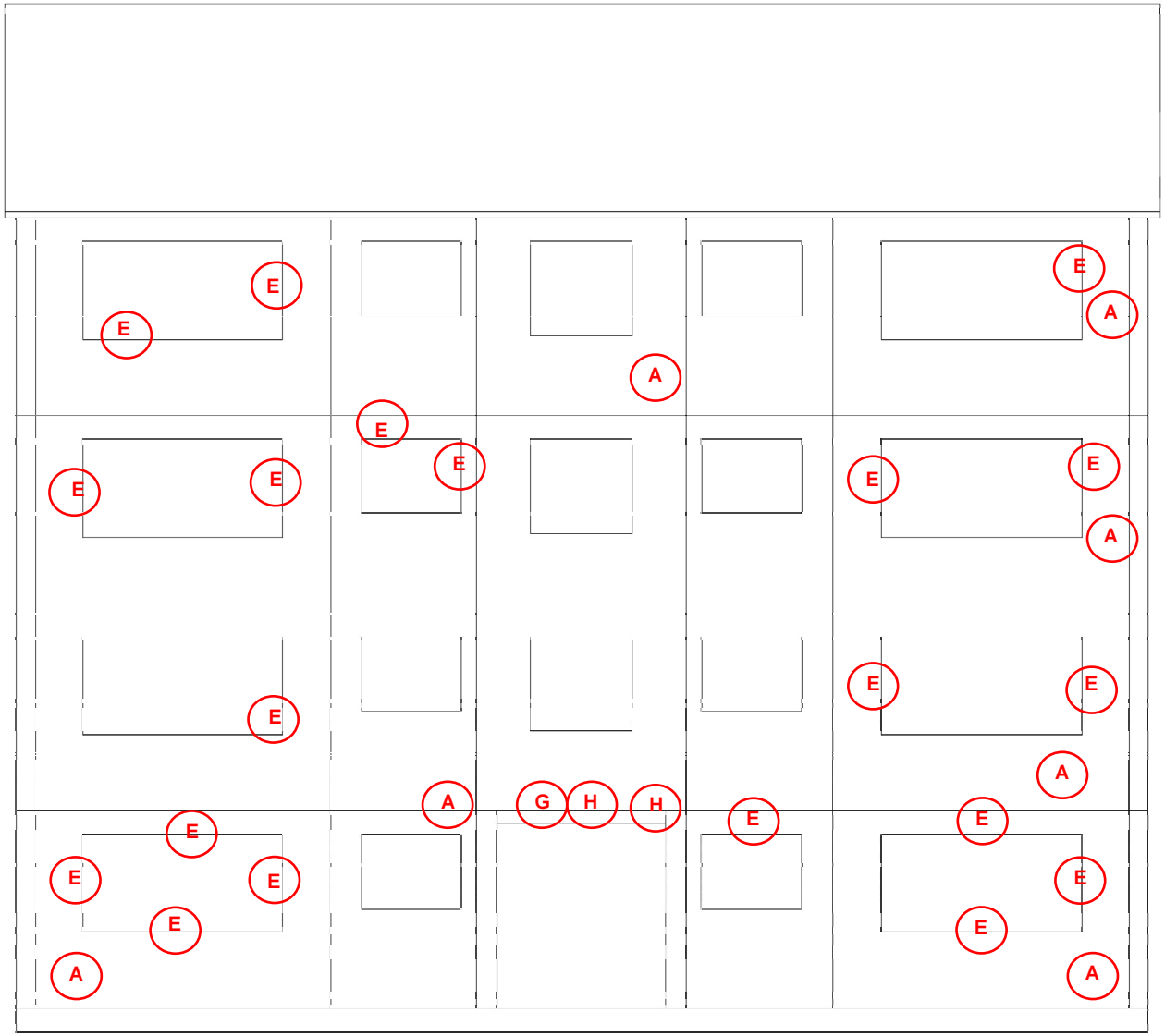

FRONT ELEVATION

Do not scale from this drawing.
All dimensions must be checked on site by the Contractor prior to the commencement of any fabrication or building works.
Where applicable, dimensions and details are to be read in conjunction with specialist consultants' drawings and/or other specifications, any discrepancy is to be brought to the attention of Michael Dyson Associates Limited prior to the commencement of any fabrication or building works.
© This drawing is the property and copyright of Michael Dyson Associates Limited. It shall not be copied to any other party without the express written consent of an authorised director of Michael Dyson Associates Limited.

NOTES

Refer to Appendix G.1 for External Defects Log.

REV	DATE	AMENDMENTS	BY	APPD

Michael Dyson associates ltd
Excellence in Housing Consultancy
West House, Meltham Road, Honley,
Huddersfield HD9 6LB
t. 01484 888888 f. 01484 884188
w. www.mdyson.co.uk

CLIENT :
RPS PLANNING & DEVELOPMENT

PROJECT :
STRUCTURAL SURVEY FOR 4NR REEMA FLATS BLOCKS IN MILTON KEYNES

TITLE :
TYPICAL EXISTING FROUNT ELEVATIONS SAWLEY HOUSE

DRAWN BY :	SM	APPROVED BY :	
DATE :	29/06/2013	DATE :	
SCALE :	1:30	ORIG. NO. DRAWING SIZE 841 x 594 - A1	
DRAWING no :	101-(REEMA)-7551	REV.	

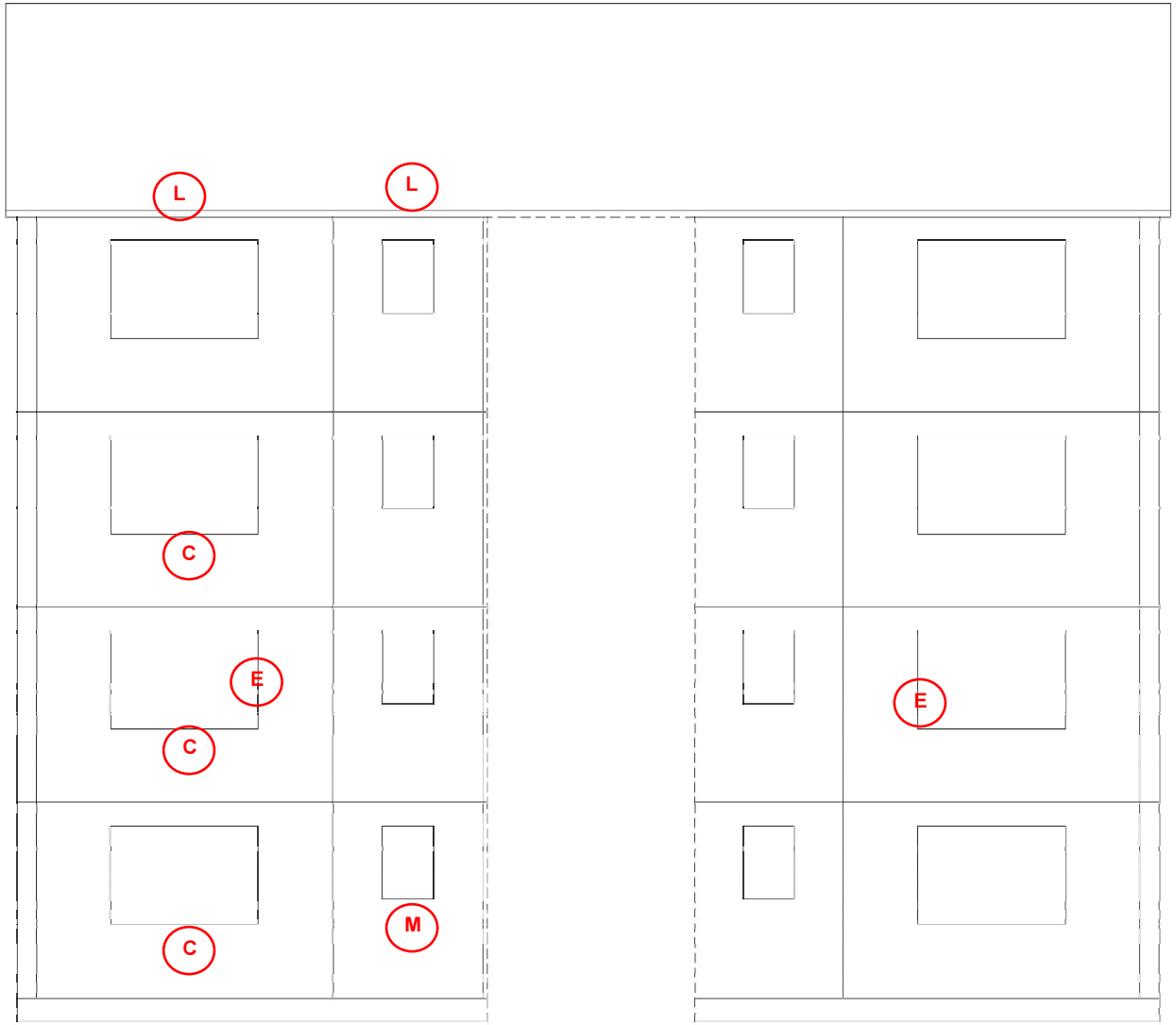

REAR ELEVATION

Do not scale from this drawing.
All dimensions must be checked on site by the Contractor prior to the commencement of any fabrication or building works.
Where applicable, dimensions and details are to be read in conjunction with specialist consultants' drawings and/or other specifications, any disparity is to be brought to the attention of Michael Dyson Associates Limited prior to the commencement of any fabrication or building works.
©This drawing is the property and copyright of Michael Dyson Associates Limited. It shall not be copied or any other party without the express written consent of an authorised director of Michael Dyson Associates Limited.

NOTES

Refer to Appendix G.1 for External Defects Log.

REV	DATE	AMENDMENTS	BY	APPD

Michael Dyson associates ltd
Excellence in Housing Consultancy
West House, Meltham Road, Honley,
Huddersfield HD9 6LB
t. 01484 666888 f. 01484 664186
w. www.mdyson.co.uk

CLIENT :
RPS PLANNING & DEVELOPMENT

PROJECT :
STRUCTURAL SURVEY FOR 4NR REEMA FLATS BLOCKS IN MILTON KEYNES

TITLE :
TYPICAL EXISTING REAR ELEVATION
SAWLEY HOUSE

DRAWN BY :	SM	APPROVED BY :	
DATE :	25/08/2013	DATE :	
SCALE :	1:30	KEY SCALE DRAWING SIZE	841 x 594 - A1
DRAWING No.	102-(REEMA)-7551	REV.	

RH GABLE ELEVATION

Do not scale from this drawing.
All dimensions must be checked on site by the Contractor prior to the commencement of any fabrication or building work.
Where applicable, dimensions and details are to be read in conjunction with specialist consultants' drawings and/or other specifications; any discrepancy is to be brought to the attention of Michael Dyson Associates Limited prior to the commencement of any fabrication or building work.
©This drawing is the property and copyright of Michael Dyson Associates Limited. It shall not be copied to any other party without the express written consent of an authorised director of Michael Dyson Associates Limited.

NOTES

Refer to Appendix G.1 for External Defects Log.

REV	DATE	AMENDMENTS	BY	APPD

Michael Dyson associates ltd
Excellence in Housing Consultancy
West House, Meltham Road, Honley,
Huddersfield HD9 6LB
t. 01484 666008 f. 01484 664106
w. www.mdyson.co.uk

CLIENT :
RPS PLANNING & DEVELOPMENT

PROJECT :
STRUCTURAL SURVEY FOR 4NR REEMA FLATS BLOCKS IN MILTON KEYNES

TITLE :
TYPICAL EXISTING RH GABLE ELEVATIONS
SAWLEY HOUSE

DRAWN BY :	SM	APPROVED BY :	
DATE :	28/08/2013	DATE :	
SCALE :	1:50	ORIGINAL DRAWING SIZE 841 x 594 - A1	
DRAWING No :	104-(EXREEMA)-7551	REV.	

10 20 30
20 40

LH GABLE ELEVATION

Do not scale from this drawing.
All dimensions must be checked on site by the Contractor prior to the commencement of any fabrication or building work.
Where applicable, dimensions and details are to be read in conjunction with specified consultants' drawings and/or other specifications; any discrepancy is to be brought to the attention of Michael Dyson Associates Limited prior to the commencement of any fabrication or building work.
©This drawing is the property and copyright of Michael Dyson Associates Limited. It is not to be copied to any other party without this express written consent of an authorised director of Michael Dyson Associates Limited.

NOTES

Refer to Appendix G.1 for External Defects Log.

REV	DATE	AMENDMENTS	BY	APPD

Michael Dyson associates ltd
Excellence in Housing Consultancy
West House, Meltham Road, Honley,
Huddersfield HD9 6LB
t. 01484 666666 f. 01484 664186
w. www.mdyson.co.uk

CLIENT :
RPS PLANNING & DEVELOPMENT

PROJECT :
STRUCTURAL SURVEY FOR 4NR REEMA FLATS BLOCKS IN MILTON KEYNES

TITLE :
TYPICAL EXISTING LH GABLE ELEVATION
SAWLEY HOUSE

DRAWN BY :	SM	APPROVED BY :	
DATE :	25/06/2013	DATE :	
SCALE :	1:50	ORIGINAL DRAWING SIZE : A1	
DRAWING NO :	103-(REEMA)-7551	REV :	

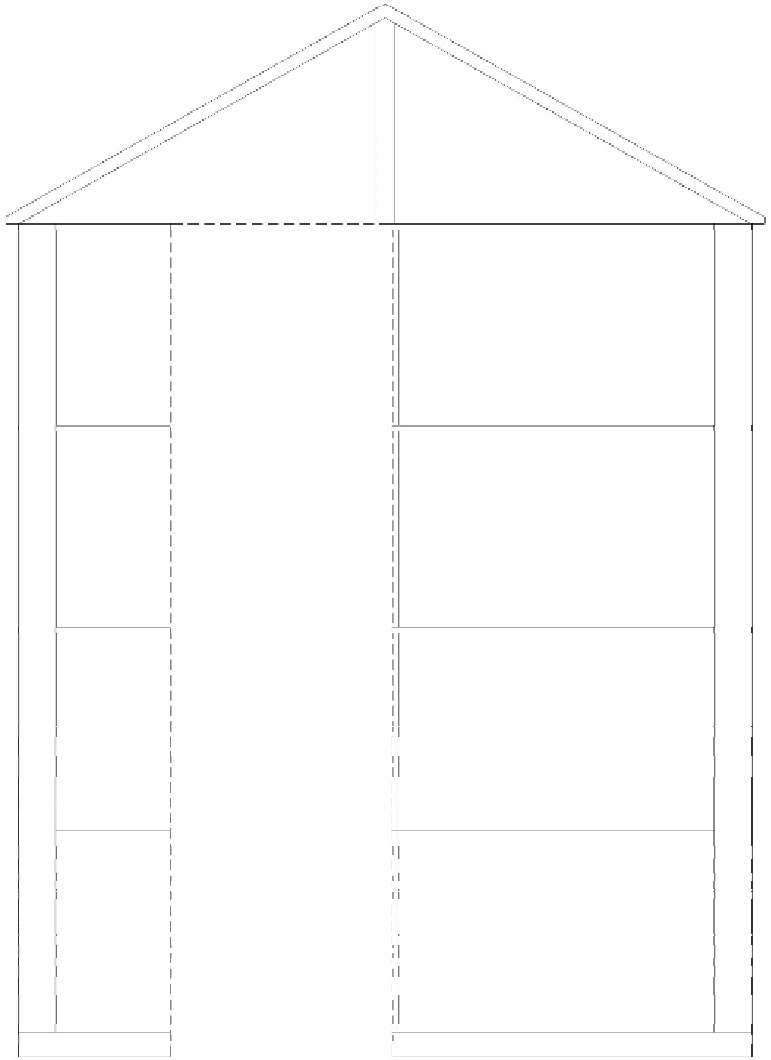

No Defects Observed

LINK GABLE ELEVATION

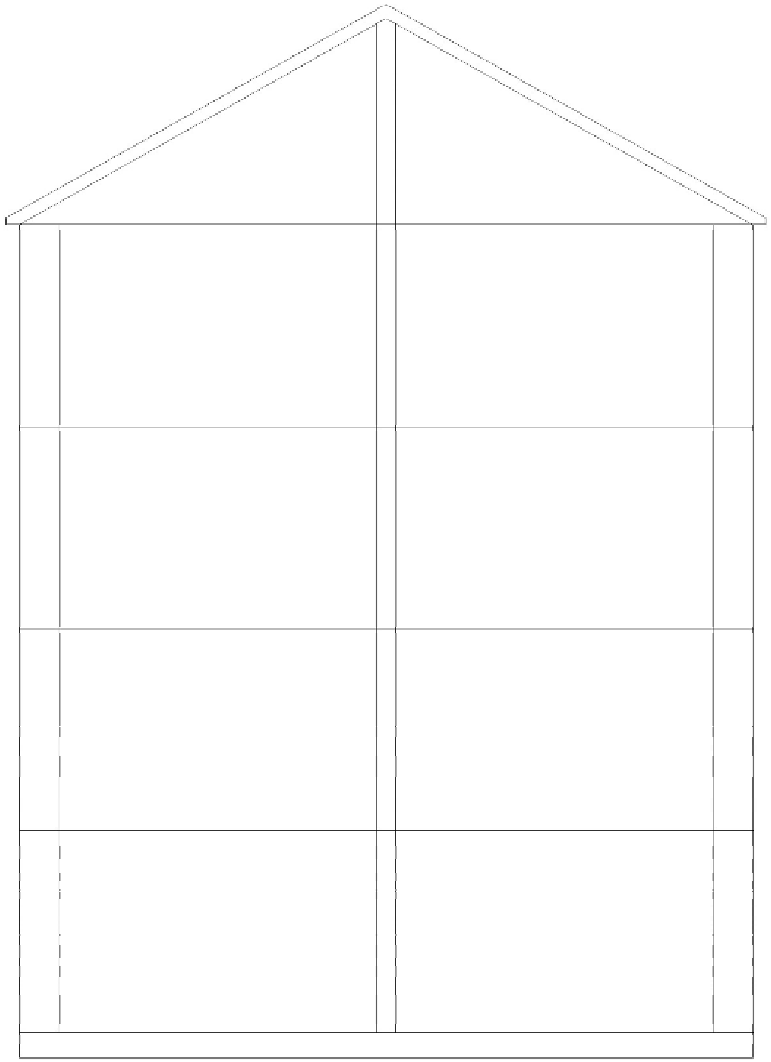

No Defects Observed

REAR LINK GABLE ELEVATION

Do not scale from this drawing.
All dimensions must be checked on site by the Contractor prior to the commencement of any fabrication or building works.
Where applicable, dimensions and details are to be read in conjunction with specialist consultant's drawings and/or other specifications, amendments to the drawing or to the dimension of Michael Dyson Associates Limited prior to the commencement of any fabrication or building works.
© This drawing is the property and copyright of Michael Dyson Associates Limited. It shall not be copied to any other party without the express written consent of an authorised director of Michael Dyson Associates Limited.

NOTES

Refer to Appendix G.1 for External Defects Log.

REV	DATE	AMENDMENTS	BY	APPD

Michael Dyson associates ltd
Excellence in Housing Consultancy
West House, Meltham Road, Honley,
Huddersfield HD9 6LB
t. 01484 888888 f. 01484 664186
w. www.mdyson.co.uk

CLIENT :
RPS PLANNING & DEVELOPMENT

PROJECT :
STRUCTURAL SURVEY FOR 4NR REEMA FLATS BLOCKS IN MILTON KEYNES

TITLE :
TYPICAL EXISTING LINK GABLE ELEVATIONS SAWLEY HOUSE

DRAWN BY :	GM	APPROVED BY :	
DATE :	25/05/2018	DATE :	
SCALE :	1:30	ORIGINAL DRAWING SIZE 841 x 594 - A1	
DRAWING No. :	105-(REEMA)-7551	REV.	

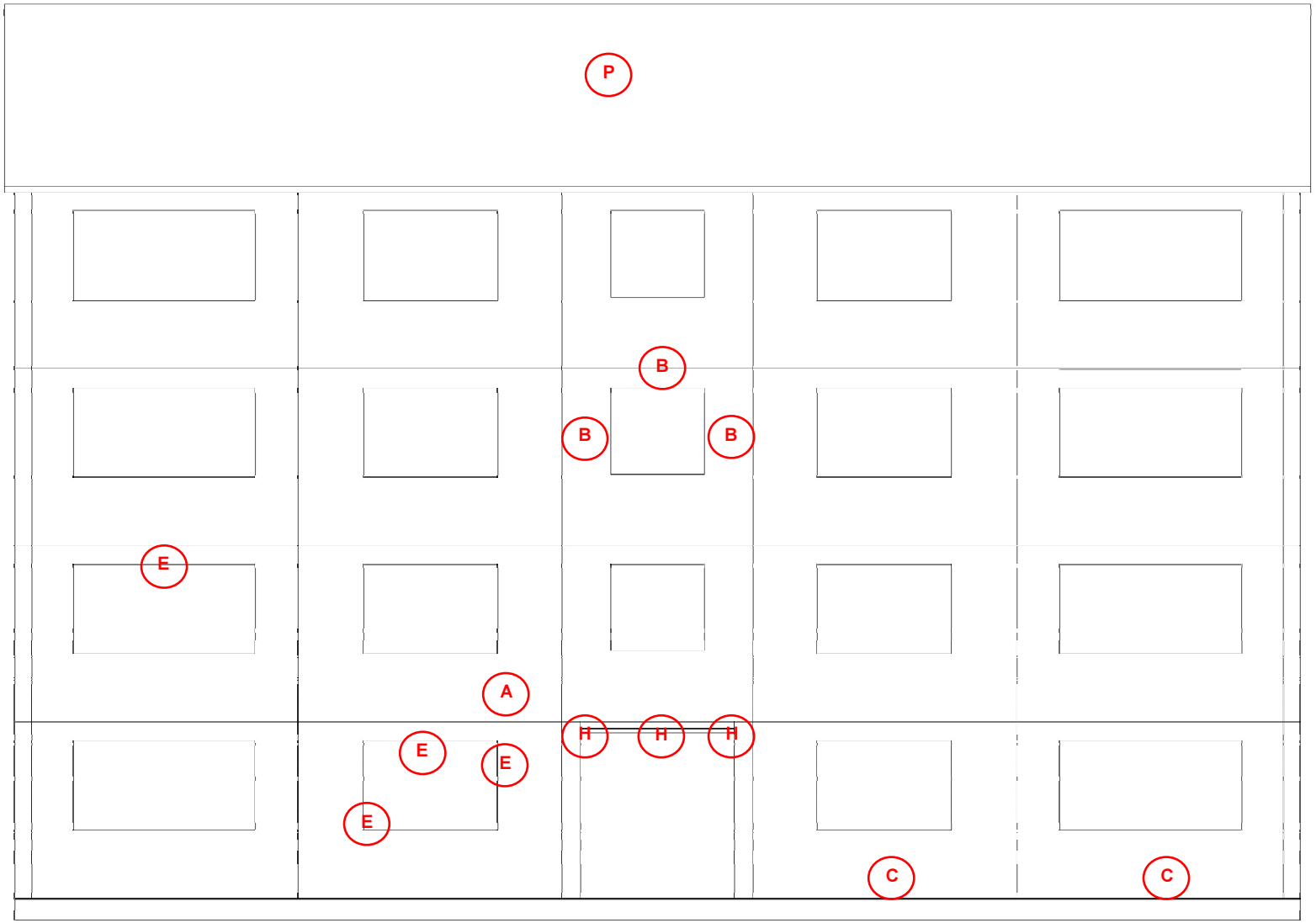

FRONT ELEVATION

DO NOT SCALE FROM THIS DRAWING
All dimensions must be checked on site by the Contractor prior to the commencement of any fabrication or building works.
Where applicable, dimensions and details are to be read in conjunction with appropriate consultants' drawings and/or other specifications, any discrepancy is to be brought to the attention of Michael Dyson Associates Limited prior to the commencement of any fabrication or building works.
©This drawing is the property and copyright of Michael Dyson Associates Limited. It shall not be copied to any other party without the express written consent of an authorised director of Michael Dyson Associates Limited.

NOTES

Refer to Appendix G.1 for External Defects Log.

REV	DATE	AMENDMENTS	BY	APPD

Michael Dyson associates ltd
Excellence in Housing Consultancy
West House, Meltham Road, Hanley,
Huddersfield HD9 6LB
t. 01484 666888 f. 01484 664186
w. www.mdyson.co.uk

CLIENT :
RPS PLANNING & DEVELOPMENT

PROJECT :
STRUCTURAL SURVEY FOR 4NR REEMA FLATS BLOCKS IN MILTON KEYNES

TITLE :
TYPICAL EXISTING FRONT ELEVATION STIRLING HOUSE

DRAWN BY :	SM	APPROVED BY :	
DATE :	25/06/2013	DATE :	
SCALE :	1:50	SHEET SIZE DRAWING SIZE 841 x 594 - A1	
DRAWING No.	401-(REEMA)-7551	REV.	

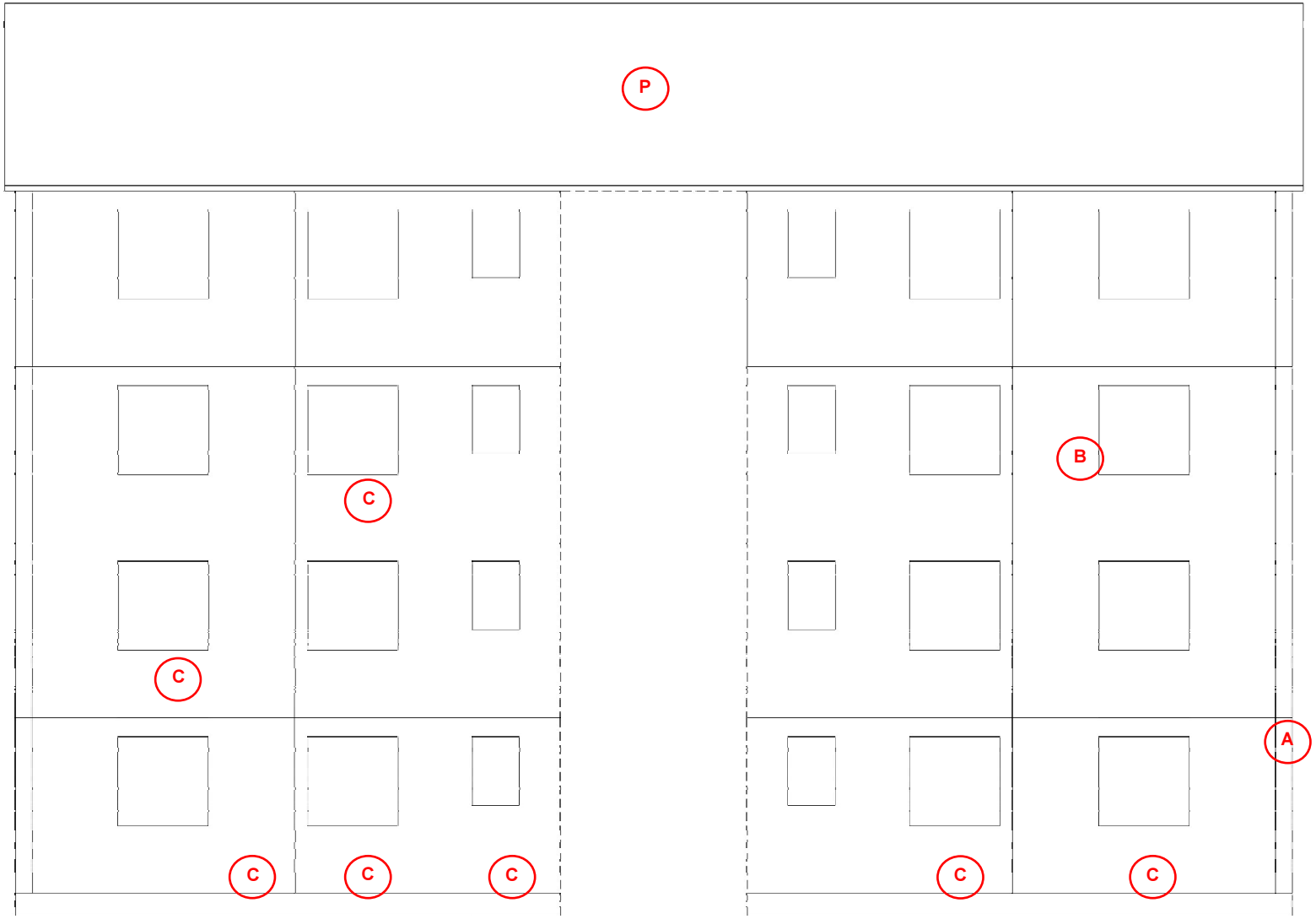

REAR ELEVATION

Do not scale from this drawing.
All dimensions must be checked on site by the Contractor prior to the commencement of any fabrication or building works.
Where applicable, dimensions and details are to be read in conjunction with specialist consultants' drawings and other specifications; any discrepancy is to be brought to the attention of Michael Dyson Associates Limited prior to the commencement of any fabrication or building works.
©This drawing is the property and copyright of Michael Dyson Associates Limited; it shall not be copied to any other party without the express written consent of an authorised director of Michael Dyson Associates Limited.

NOTES

Refer to Appendix G.1 for External Defects Log.

REV	DATE	AMENDMENTS	BY	APPD

Michael Dyson associates ltd
Excellence in Housing Consultancy
West House, Meltham Road, Honley,
Huddersfield HD9 6LB
t. 01484 666666 f. 01484 664166
w. www.mdyson.co.uk

CLIENT :
RPS PLANNING & DEVELOPMENT

PROJECT :
STRUCTURAL SURVEY FOR 4NR REEMA FLATS BLOCKS IN MILTON KEYNES

TITLE :
TYPICAL EXISTING REAR ELEVATION STIRLING HOUSE

DRAWN BY :	SM	APPROVED BY :	
DATE :	25/09/2013	DATE :	
SCALE :	1:50	ORIGINAL DRAWING SIZE 841 x 594 - A1	
DRAWING NO :	402-(REEMA)-7551	REV	

RH GABLE ELEVATION

Do not scale from this drawing.
All dimensions must be checked on site by the Contractor prior to the commencement of any fabrication or building works.
Where applicable, dimensions and details are to be read in conjunction with specialist consultants' drawings and/or other specifications, any disparity is to be brought to the attention of Michael Dyson Associates Limited prior to the commencement of any fabrication or building works.
©This drawing is the property and copyright of Michael Dyson Associates Limited. It shall not be copied to any other party without the express written consent of an authorised director of Michael Dyson Associates Limited.

NOTES

Please Refer to Appendix G.1 for External Defects Log Corresponding to Labels on Drawing.

REV	DATE	AMENDMENTS	BY	APPD

Michael Dyson associates ltd
Excellence in Housing Consultancy
West House, Maltham Road, Honley,
Huddersfield HD9 6LB
t. 01484 666888 f. 01484 664188
w. www.mdyson.co.uk

CLIENT :
RPS PLANNING & DEVELOPMENT

PROJECT :
STRUCTURAL SURVEY FOR 4NR REEMA FLATS BLOCKS IN MILTON KEYNES

TITLE :
TYPICAL RH GABLE ELEVATION
STIRLING HOUSE

DRAWN BY :	SM	APPROVED BY :	
DATE :	25/06/2012	DATE :	
SCALE :	1:10	ORIGINAL DRAWING SIZE 841 x 594 - A1	
DRAWING No.	404-(REEMA)-7551	REV.	

LH GABLE ELEVATION

Do not scale from this drawing.
All dimensions must be checked on site by the Contractor prior to the commencement of any fabrication or building works.
Where applicable dimensions and details are to be read in conjunction with specialist consultants' drawings and/or other specifications, any discrepancy to be brought to the attention of Michael Dyson Associates Limited prior to the commencement of any fabrication or building works.
©This drawing is the property and copyright of Michael Dyson Associates Limited. It shall not be copied to any other party without the express written consent of an authorised director of Michael Dyson Associates Limited.

NOTES

Refer to Appendix G.1 for External Defects Log.

REV	DATE	AMENDMENTS	BY	APPRV

Michael Dyson associates ltd
Excellence in Housing Consultancy
West House, Meltham Road, Honley,
Huddersfield HD9 6LB
t. 01484 666666 f. 01484 664186
w. www.mdyson.co.uk

CLIENT :
RPS PLANNING & DEVELOPMENT

PROJECT :
STRUCTURAL SURVEY FOR 4NR REEMA FLATS BLOCKS IN MILTON KEYNES

TITLE :
TYPICAL EXISTING LH GABLE ELEVATION STIRLING HOUSE

DRAWN BY :	SM	APPROVED BY :	
DATE :	23/06/2011	DATE :	
SCALE :	1:40		
DRAWING NO :	403-(REEMA)-7551	REV.	

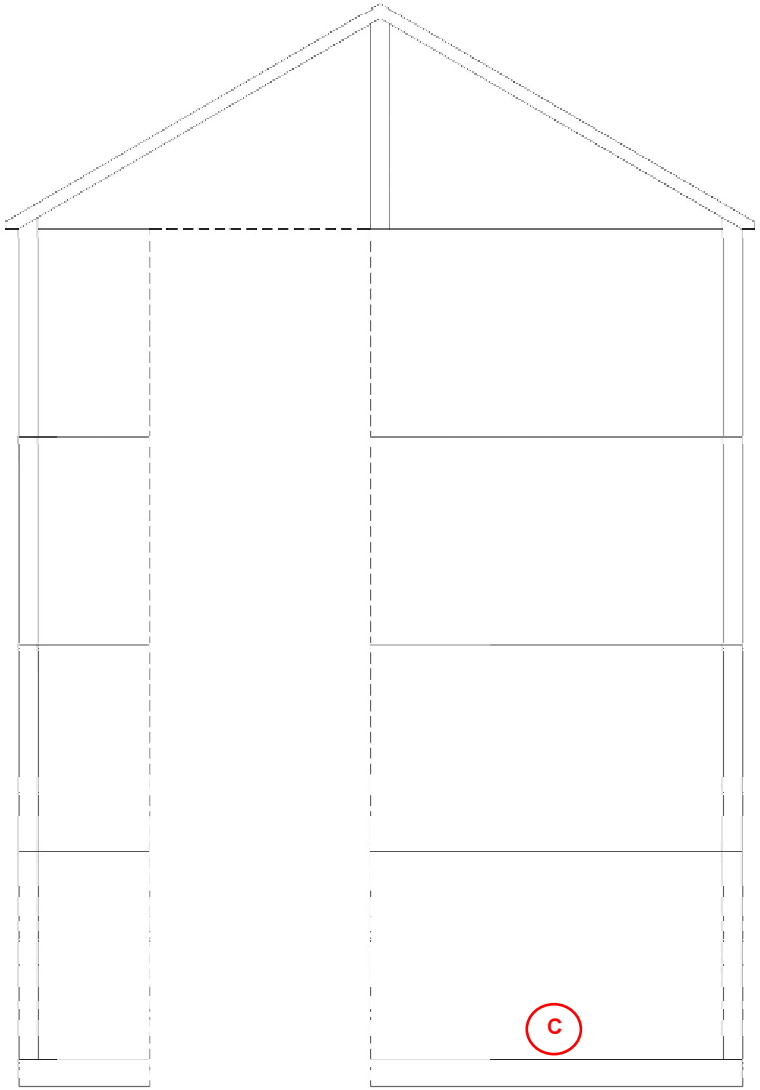

LINK GABLE ELEVATION

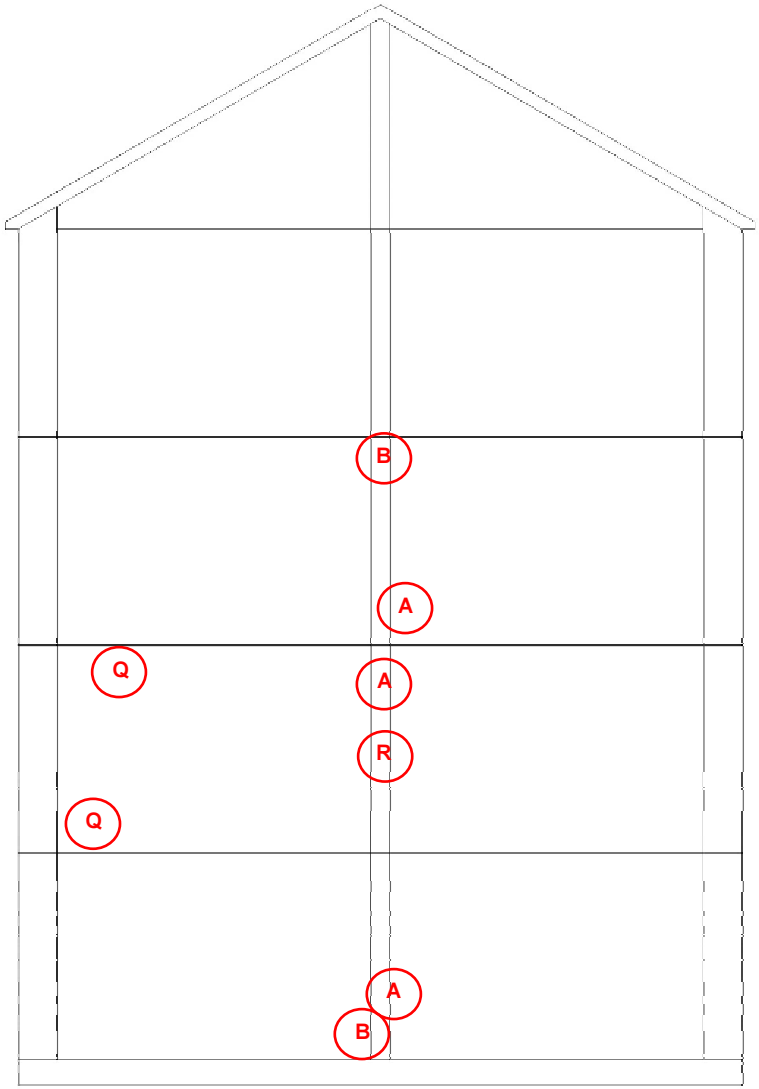

REAR LINK GABLE ELEVATION

Do not scale from this drawing.
All dimensions must be checked on site by the Contractor prior to the commencement of any fabrication or building works.
Where applicable, dimensions and details are to be read in conjunction with specialist consultants' drawings and/or other specifications; any discrepancy is to be brought to the attention of Michael Dyson Associates Limited prior to the commencement of any fabrication or building works.
©This drawing is the property and copyright of Michael Dyson Associates Limited. It shall not be copied to any other party without the express written consent of an authorised director of Michael Dyson Associates Limited.

NOTES

Refer to Appendix G.1 for External Defects Log.

REV	DATE	AMENDMENTS	BY	APPD

Michael Dyson associates ltd
Pioneering in Housing Consultancy
West House, Meltham Road, Honley,
Huddersfield HD9 6LB
t. 01484 666800 f. 01484 664100
w. www.mdyson.co.uk

CLIENT :
RPS PLANNING & DEVELOPMENT

PROJECT :
STRUCTURAL SURVEY FOR 4NR REEMA FLATS BLOCKS IN MILTON KEYNES

TITLE :
TYPICAL EXISTING LINK GABLE ELEVATION STIRLING HOUSE

DRAWN BY :	SM	APPROVED BY :	
DATE :	29/06/2013	DATE :	
SCALE :	1:50	ORIGINAL DRAWING SIZE : 841 x 594 - A1	
DRAWING NO :	405-(REEMA)-7551	REV :	

10 30 50
20 40

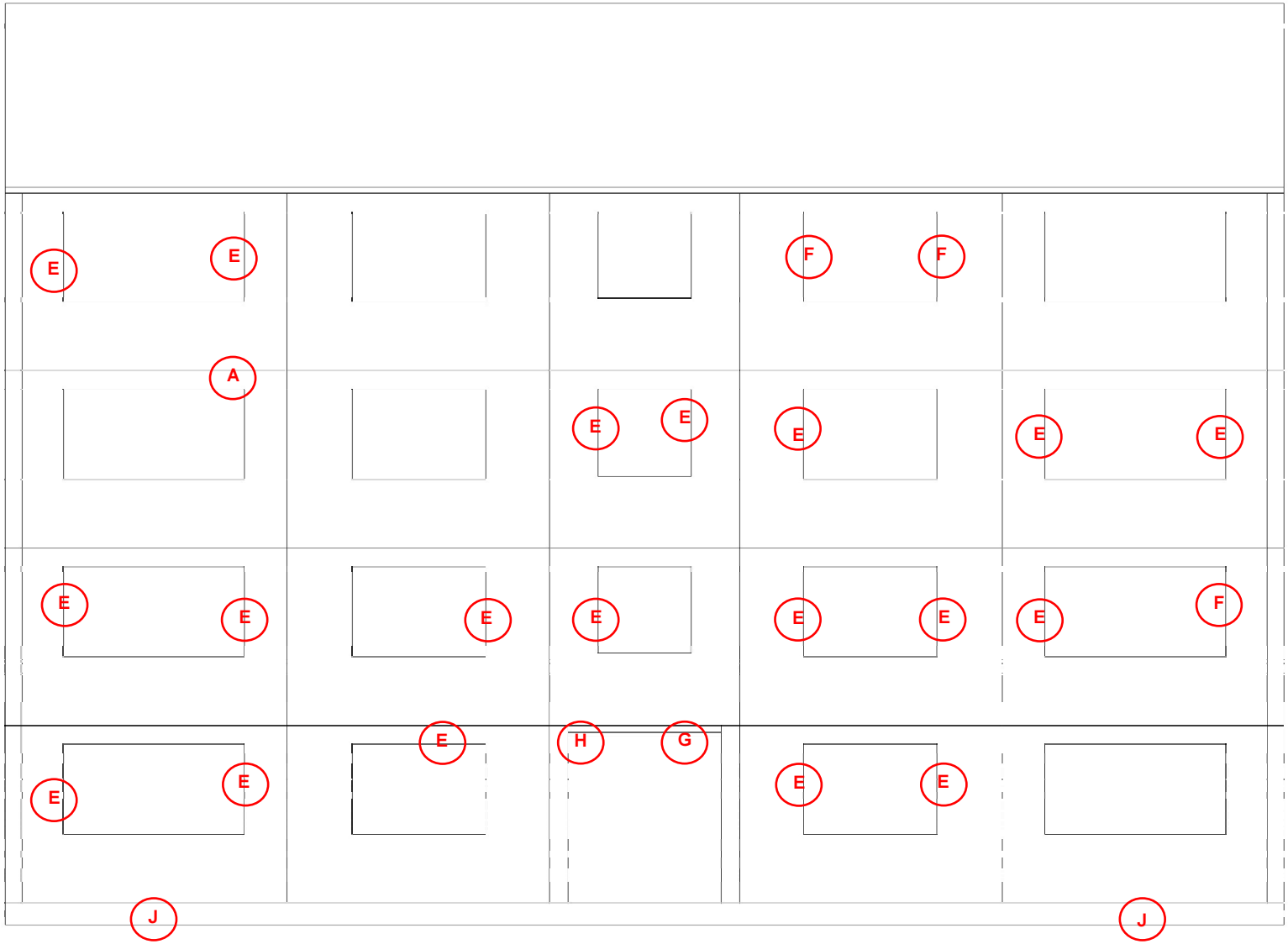

FRONT ELEVATION

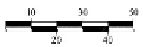

Do not scale from this drawing.
All dimensions must be checked on site by the Contractor prior to the commencement of any Marketing or building works.
Where applicable, dimensions and data brand to be read in conjunction with specialist consultants' drawings and/or other specifications, any discrepancy is to be brought to the attention of Michael Dyson Associates Limited prior to the commencement of any Marketing or building works.
©The drawing is the property and copyright of Michael Dyson Associates Limited. It shall not be copied to any other party without the express written consent of the authorised director of Michael Dyson Associates Limited.

NOTES

Refer to Appendix G.1 for External Defects Log.

REV	DATE	DESCRIPTION	BY	APPD

Michael Dyson associates ltd
Excellence in Housing Consultancy
West House, Meltham Road, Honley,
Huddersfield HD9 6LB
t. 01484 666888 f. 01484 664188
w. www.mdyson.co.uk

CLIENT :
RPS PLANNING & DEVELOPMENT

PROJECT :
STRUCTURAL SURVEY FOR 4NR REEMA FLATS BLOCKS IN MILTON KEYNES

TITLE :
TYPICAL EXISTING FRONT ELEVATION
WALTHAM HOUSE

DRAWN BY :	SM	APPROVED BY :	
DATE :	25/06/2013	DATE :	
SCALE :	1:20	DIMENSIONS SHOWN IN MILLIMETRES 541 x 594 - A1	
DRAWING No.	201-(REEMA)-7551	REV	

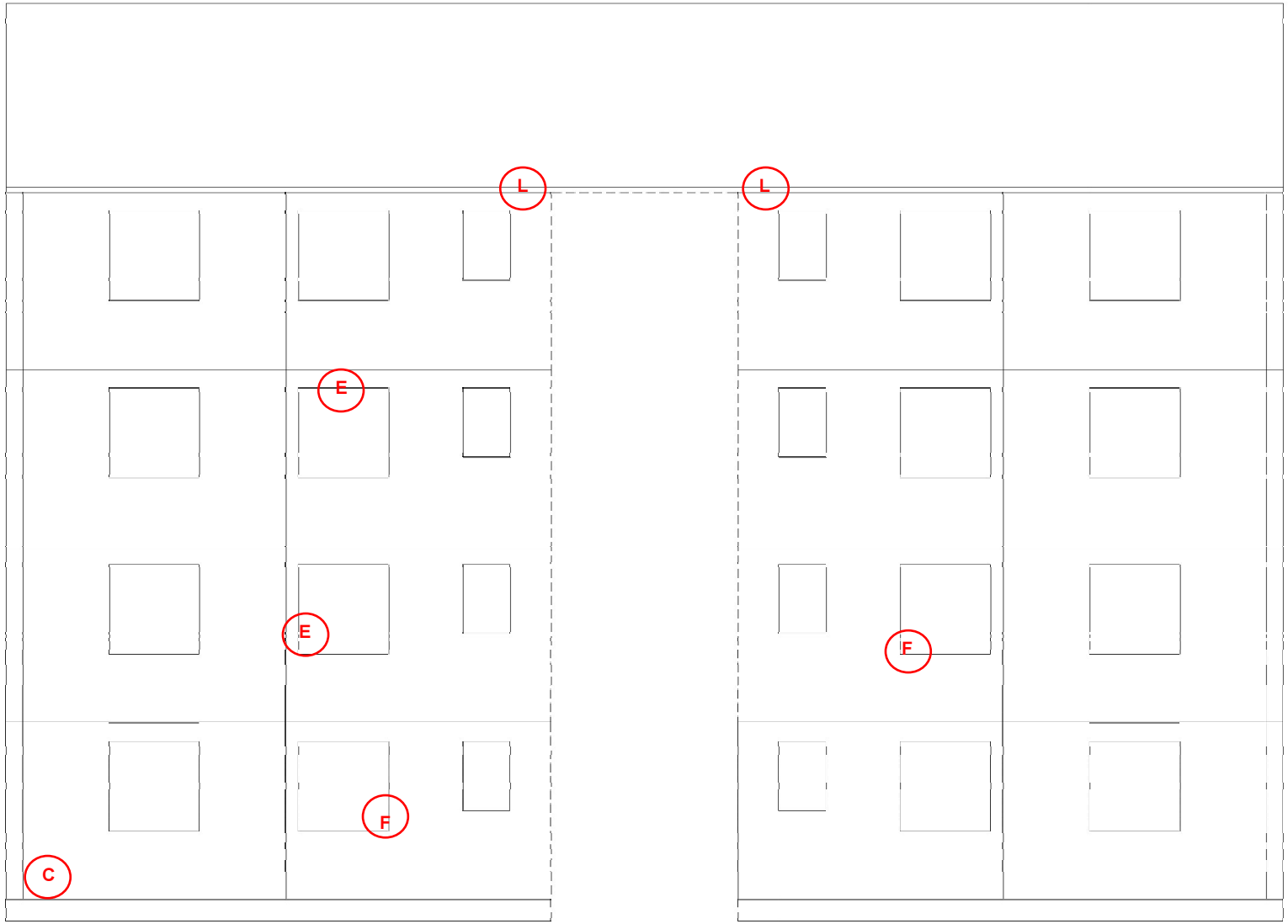

REAR ELEVATION

Do not scale from this drawing.
All dimensions must be checked on site by the Contractor prior to the commencement of any fabrication or building works.
Where applicable, dimensions and details are to be read in conjunction with specialist consultants' drawings and/or other specifications, any disparity is to be brought to the attention of Michael Dyson Associates Limited prior to the commencement of any fabrication or building works.
©This drawing is the property and copyright of Michael Dyson Associates Limited. It shall not be copied to any other party without the express written consent of an authorised director of Michael Dyson Associates Limited.

NOTES

Refer to Appendix G.1 for External Defects Log.

REV	DATE	AMENDMENTS	BY	APPD

Michael Dyson associates ltd
Excellence in Housing Consultancy
West House, Meltham Road, Honley,
Huddersfield HD9 6LB
t. 01484 666888 f. 01484 664186
w. www.mdyson.co.uk

CLIENT :
RPS PLANNING & DEVELOPMENT

PROJECT :
STRUCTURAL SURVEY FOR 4NR REEMA FLATS BLOCKS IN MILTON KEYNES

TITLE :
TYPICAL EXISTING REAR ELEVATIONS WALTHAM HOUSE

DRAWN BY :	SJL	APPROVED BY :	
DATE :	20/05/2013	DATE :	
SCALE :	1:30	ORIGINAL DRAWING SIZE 841 x 594 - A1	
DRAWING No :	202-(REEMA)-7551	REV :	

RH GABLE ELEVATION

Do not scale from this drawing.
All dimensions must be checked on site by the Contractor prior to the commencement of any fabrication or building works.
Where applicable, dimensions and details are to be read in conjunction with specialist consultants' drawings and/or other specifications, any disparity is to be brought to the attention of Michael Dyson Associates Limited prior to the commencement of any fabrication or building works.
© This drawing is the property and copyright of Michael Dyson Associates Limited. It shall not be copied to any other party without the express written consent of an authorised director of Michael Dyson Associates Limited.

NOTES

Refer to Appendix G.1 for External Defects Log.

REV	DATE	AMENDMENTS	BY	APPD

Michael Dyson associates ltd
Excellence in Housing Consultancy
West House, Meltham Road, Honley,
Huddersfield HD9 6LB
t. 01484 666000 f. 01484 664186
w. www.mdyson.co.uk

CLIENT :
RPS PLANNING & DEVELOPMENT

PROJECT :
STRUCTURAL SURVEY FOR 4NR REEMA FLATS BLOCKS IN MILTON KEYNES

TITLE :
TYPICAL EXISTING RH GABLE ELEVATION WALTHAM HOUSE

DRAWN BY :	SM	APPROVED BY :	
DATE :	25/06/2013	DATE :	
SCALE :	1:20	ORIGINAL DRAWING SIZE	841 x 594 - A1
DRAWING NO :	204-(REEMA)-7551	REV	

LH GABLE ELEVATION

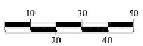

Do not scale from this drawing.
All dimensions must be checked on site by the Contractor prior to the commencement of any fabrication or building works.
Where applicable, dimensions and details are to be read in conjunction with specialist consultants' drawings and/or other specifications; any discrepancy is to be brought to the attention of Michael Dyson Associates Limited prior to the commencement of any fabrication or building works.
©This drawing is the property and copyright of Michael Dyson Associates Limited. It shall not be copied to any other party without the express written consent of an authorised director of Michael Dyson Associates Limited.

NOTES

Refer to Appendix G.1 for External Defects Log.

REV	DATE	AMENDMENTS	BY	APPD

Michael Dyson associates ltd
Excellence in Housing Consultancy
West House, Meltham Road, Honley,
Huddersfield HD9 6LB
t. 01484 666888 f. 01484 664186
w. www.mdyson.co.uk

CLIENT :
RPS PLANNING & DEVELOPMENT

PROJECT :
STRUCTURAL SURVEY FOR 4NR REEMA FLATS BLOCKS IN MILTON KEYNES

TITLE :
TYPICAL EXISTING LH GABLE ELEVATION WALTHAM HOUSE

DRAWN BY :	SM	APPROVED BY :	
DATE :	25/06/2019	DATE :	
SCALE :	1:50	DRAWING DRAWING SIZE	841 x 594 - A1
DRAWING NO :	203-(REEMA)-7551	REV :	

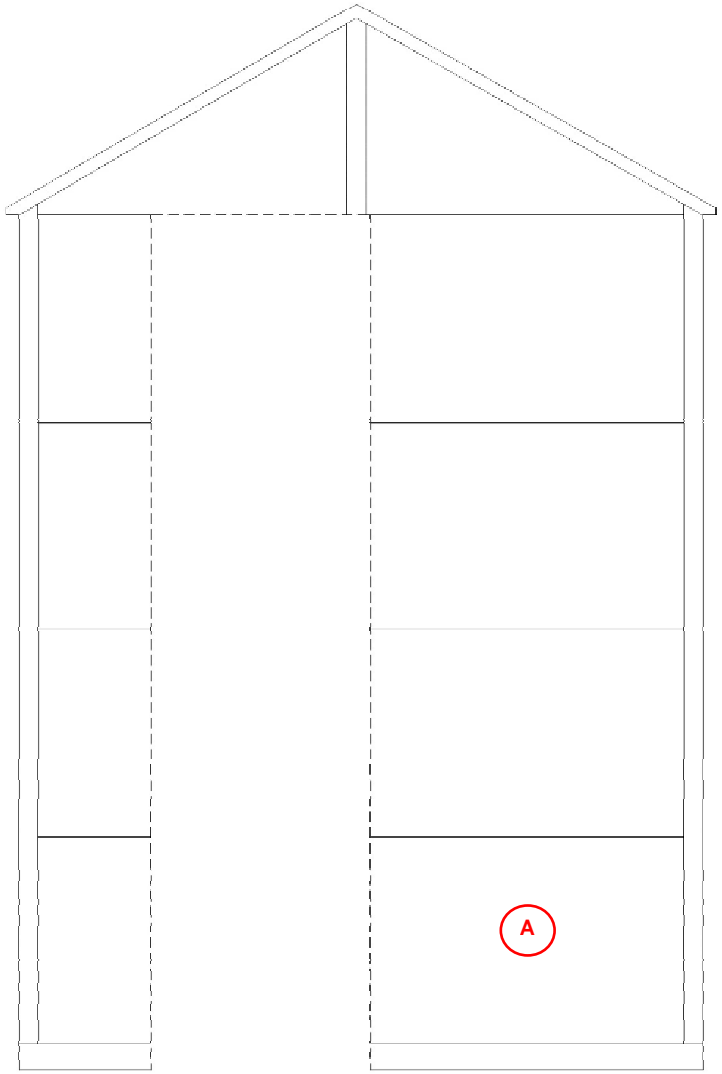

LINK GABLE ELEVATION

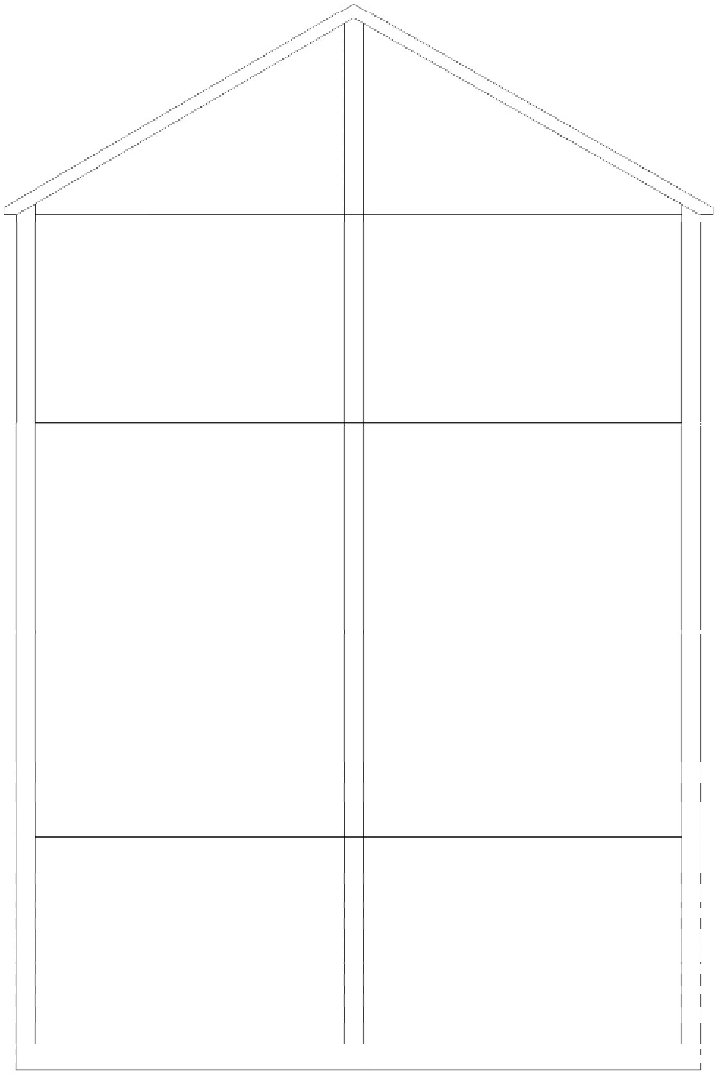

No Defects Observed

REAR LINK GABLE ELEVATION

Do not scale from this drawing.
All dimensions must be checked on site by the Contractor prior to the commencement of any fabrication or building works.
Where applicable, dimensions and details are to be read in conjunction with specialist consultants' drawings and/or other specifications, any disparity is to be brought to their attention of Michael Dyson Associates Limited prior to the commencement of any fabrication or building works.
©This drawing is the property of Michael Dyson Associates Limited, it shall not be copied, in any other party without the explicit written consent of an authorised director of Michael Dyson Associates Limited.

NOTES

Refer to Appendix G.1 for External Defects Log.

REV	DATE	AMENDMENTS	BY	APPD

Michael Dyson associates ltd
Excellence in Housing Consultancy
West House, Meltham Road, Honley,
Huddersfield HD9 6LB
t. 01484 666666 f. 01484 664188
w. www.mdyson.co.uk

CLIENT :
RPS PLANNING & DEVELOPMENT

PROJECT :
STRUCTURAL SURVEY FOR 4NR REEMA FLATS BLOCKS IN MILTON KEYNES

TITLE :
TYPICAL EXISTING LINK GABLE ELEVATION WALTHAM HOUSE

DRAWN BY :	SM	APPROVED BY :	
DATE :	25/06/2013	DATE :	
SCALE :	1:50	FOR DESIGN, DRAWING SIZE	B41 x 594 - A1
DRAWING No :	205-(REEMA)-7551	REV :	

RPS PLANNING & DEVELOPMENT			
Elevation & Plan Drawings			
Internal Communal Area Defects Log			
House Type	4 Storey Reema Flats Blocks	**Site**	Bletchley
Defect	**Description of Defect**		
1	Cracking to Panel Joint		
2	Cracking to Panel		
3	Cracking to Window Surround		

Table G.6

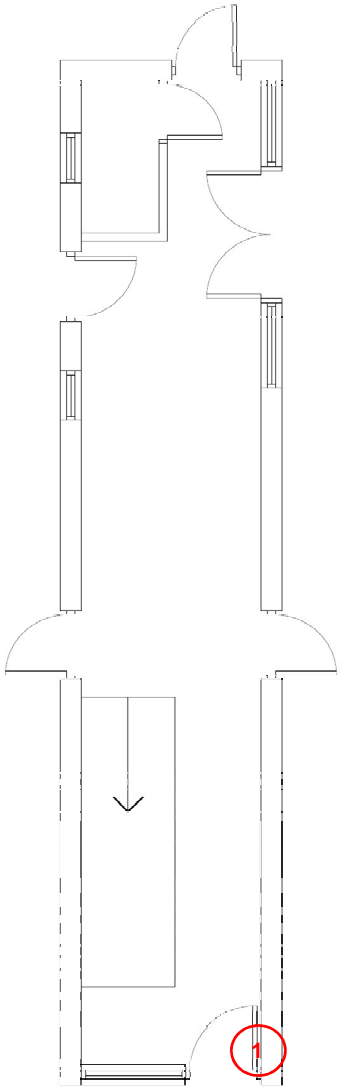

COMMUNAL STAIRCASE GROUND FLOOR PLAN

Do not scale from this drawing.
All dimensions must be checked on site by the Contractor prior to the commencement of any fabrication or building works.
Where applicable, dimensions and details are to be read in conjunction with specialist consultants' drawings and/or other specifications, any disparity is to be brought to the attention of Michael Dyson Associates Limited prior to the commencement of any fabrication or building works.
©This drawing is the property and copyright of Michael Dyson Associates Limited. It shall not be copied to any other party without the express written consent of an authorised director of Michael Dyson Associates Limited.

NOTES

Refer to Appendix G.6 for Internal Defects Log.

REV	DATE	AMENDMENTS	BY	APPD

Michael Dyson associates ltd
Excellence in Housing Consultancy
West House, Meltham Road, Honley,
Huddersfield HD9 6LB
t: 01484 666666 f: 01484 664166
w: www.mdyson.co.uk

CLIENT :
RPS PLANNING AND DEVELOPMENT

PROJECT :
STRUCTURAL SURVEYS TO 4NR REEMA FLATS BLOCKS IN MILTON KEYNES

TITLE :
COMMUNAL STAIRS GROUND FLOOR PLANS, NORFOLK HOUSE

DRAWN BY :	SM	APPROVED BY :	
DATE :	06-07-2018	DATE :	
SCALE :	1:30	MICHAEL DYSON PROJECT SIZE: 841 x 594 - A1	
DRAWING No :	310-(REEMA)-7551	REV	

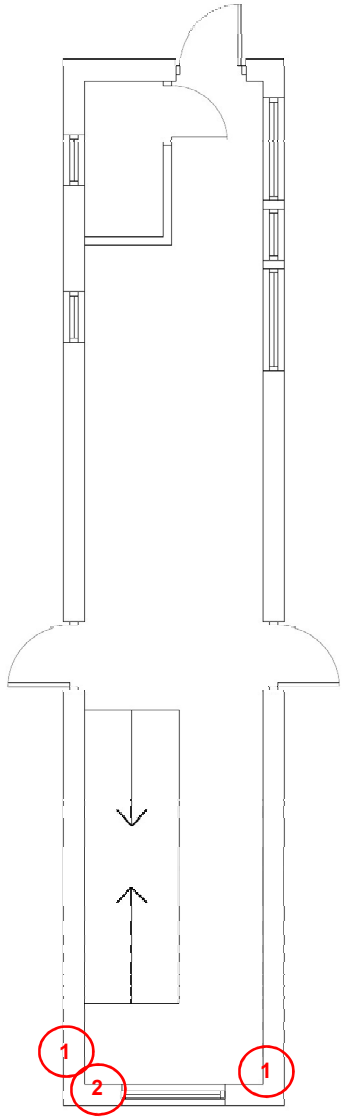

COMMUNAL STAIRCASE FIRST FLOOR PLAN

Do not scale from this drawing.
All dimensions must be checked on site by the Contractor prior to the commencement of any fabrication or building works.
All new applicable dimensions and details are to be read in conjunction with specialist consultants' drawings and/or other specifications, any discrepancy to be brought to the attention of Michael Dyson Associates Limited prior to the commencement of any fabrication or building works.
©This drawing is the property and copyright of Michael Dyson Associates Limited. It shall not be used in any other party without the express written consent of an authorised director of Michael Dyson Associates Limited.

NOTES

Refer to Appendix G.6 for Internal Defects Log.

REV	DATE	AMENDMENTS	BY	APPD

Michael Dyson associates ltd
Experience in Housing Consultancy
West House, Meltham Road, Honley,
Huddersfield HD9 6LB
t. 01484 666888 f. 01484 664188
w. www.mdyson.co.uk

CLIENT :

RPS PLANNING & DEVELOPMENT

PROJECT :

STRUCTURAL SURVEYS TO 4NR REEMA FLATS BLOCKS IN MILTON KEYNES

TITLE :

COMMUNAL STAIRCASE FIRST FLOOR PLAN
NORFOLK HOUSE

DRAWN BY :	SM	APPROVED BY :	
DATE :	06-07-2013	DATE :	
SCALE :	1:50	ORIGINAL DRAWING SIZE 841 x 594 - A1	
DRAWING NO :	311-(REEMA)-7551	REV :	

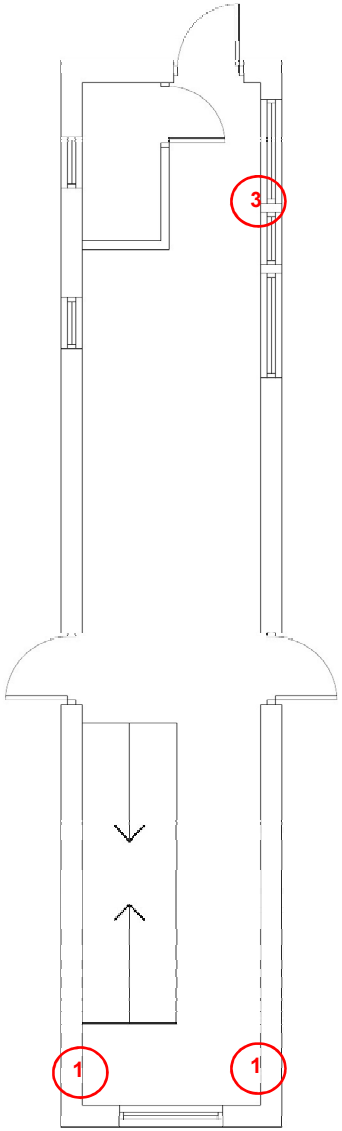

COMMUNAL STAIRCASE SECOND FLOOR PLAN

Do not scale from this drawing.
All dimensions must be checked on site by the Contractor prior to the commencement of any fabrication or building works.
Where applicable, all dimensions until date is not to be read in conjunction with specialist consultants' drawings and/or other specifications, any disparity is to be brought to the attention of Michael Dyson Associates Limited prior to the commencement of any fabrication or building works.
©This drawing is the property and copyright of Michael Dyson Associates Limited. It shall not be copied to any other party without the express written consent of an authorised director of Michael Dyson Associates Limited.

NOTES

Refer to Appendix G.6 for Internal Defects Log.

REV	DATE	AMENDMENTS	BY	APPD

Michael Dyson associates ltd
Excellence in Housing Consultancy
West House, Meltham Road, Honley,
Huddersfield HD9 6LB
t. 01484 666888 f. 01484 664186
w. www.mdyson.co.uk

CLIENT :
R5PS PLANNING & DEVELOPMENT

PROJECT :
STRUCTURAL SURVEY OF 4NR REEMA FLATS BLOCKS IN MILTON KEYNES

TITLE :
COMMUNAL STAIRCASE SECOND FLOOR PLAN
NORFOLK HOUSE

DRAWN BY :	SM	APPROVED BY :	
DATE :	03-07-2013	DATE :	
SCALE :	1:20	ORIGINAL DRAWING SIZE 841 x 594 - A1	
DRAWING No :	312-(REEMA)-7551	REV.	

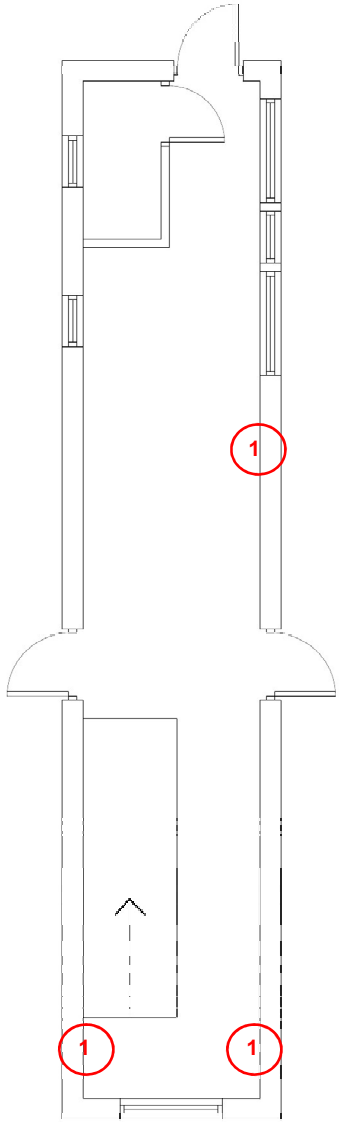

COMMUNAL STAIRCASE THIRD FLOOR PLANS

Do not scale from this drawing.
All dimensions must be checked on site by the Contractor prior to the commencement of any fabrication or building works.
Where applicable, dimensions and details are to be read in conjunction with specified consultants' drawings and/or other specifications, any disparity is to be brought to the attention of Michael Dyson Associates Limited prior to the commencement of any fabrication or building works.
©This drawing is the property and copyright of Michael Dyson Associates Limited. It shall not be copied to any other party without the express written consent of an authorised director of Michael Dyson Associates Limited.

NOTES:

Refer to Appendix G.6 for Internal Defects Log.

ISSN	DATE	REVISIONS(S)	BY	APPD

Michael Dyson associates ltd
Excellence in Housing Consultancy
West House, Meltham Road, Honley,
Huddersfield HD9 6LB
t. 01484 666888 f. 01484 664186
w. www.mdyson.co.uk

CLIENT:
RPS PLANNING & DEVELOPMENT

PROJECT:
STRUCTURAL SURVEY TO 4NR REEMA FLATS BLOCKS IN MILTON KEYNES

TITLE:
COMMUNAL STAIRCASE THIRD FLOOR PLAN
NORFOLK HOUSE

DRAWN BY:	SM	APPROVED BY:	
DATE:	05-07-2013	DATE:	
SCALE:	1:50	DRAWING SIZE: 841 x 594 - A1	
DRAWING No:	313-(Reema)-7551	REV:	

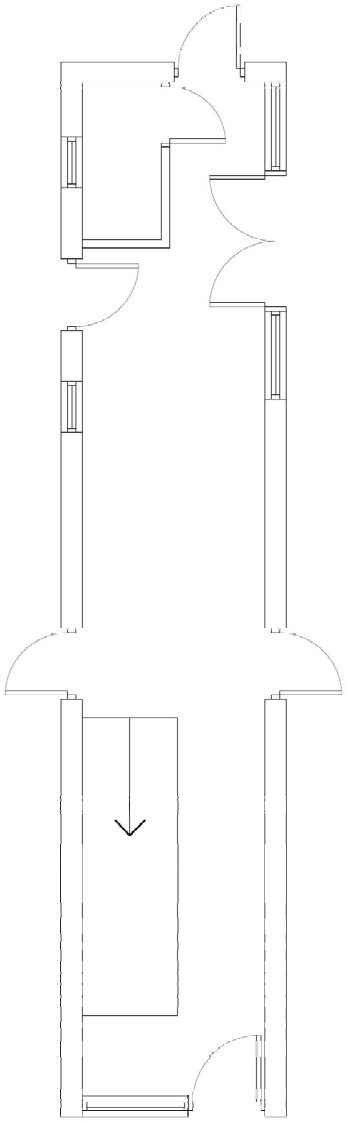

No Internal Defects

COMMUNAL STAIRCASE GROUND FLOOR PLAN

Do not scale from this drawing.
All dimensions must be checked on site by the Contractor prior to the commencement of any fabrication or building works.
Where applicable, dimensions and details are to be read in conjunction with specialist consultants' drawings and/or other specifications, any disparity is to be brought to the attention of Michael Dyson Associates Limited prior to the commencement of any fabrication or building works.
© This drawing is the property and copyright of Michael Dyson Associates Limited; it shall not be copied to any other party without the express written consent of an authorised director of Michael Dyson Associates Limited.

NOTES

Refer to Appendix G.6 for Internal Defects Log.

REV	DATE	AMENDMENTS	BY	APPD

Michael Dyson associates ltd
Excellence in Housing Consultancy
West House, Meltham Road, Honley,
Huddersfield HD9 6LB
t. 01484 888888 f. 01484 664188
w. www.mdyson.co.uk

CLIENT:
RPS PLANNING AND DEVELOPMENT

PROJECT:
STRUCTURAL SURVEYS TO 4NR REEMA FLATS BLOCKS IN MILTON KEYNES

TITLE:
COMMUNAL STAIRS GROUND FLOOR PLANS SAWLEY HOUSE

DRAWN BY:	SM	APPROVED BY:	
DATE:	03-07-2013	SCALE:	
SCALE:	1:20	DWG SIZE: 841 x 594 - A1	
DRAWING NO:	110-(REEMA)-7551	REV:	

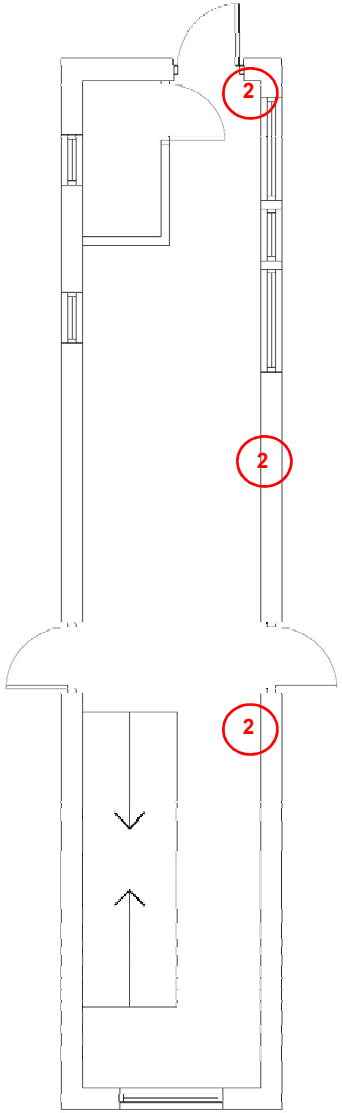

COMMUNAL STAIRCASE FIRST FLOOR PLAN

Do not scale from this drawing.
All dimensions must be checked on site by the Contractor prior to the commencement of any fabrication or building works.
Where applicable dimensions and details are to be read in conjunction with specialist consultants' drawings and/or other specifications, any disparity to be brought to the attention of Michael Dyson Associates Limited prior to the commencement of any fabrication or building works.
© This drawing is the property and copyright of Michael Dyson Associates Limited. It shall not be copied to any other party without the express written consent of an authorised director of Michael Dyson Associates Limited.

NOTES

Refer to Appendix G.6 for Internal Defects Log.

REV	DATE	AMENDMENTS	BY	APPD

Michael Dyson associates ltd
Excellence in Housing Consultancy
West House, Meltham Road, Honley,
Huddersfield HD9 6LB
t. 01484 666888 f. 01484 664188
w. www.mdyson.co.uk

CLIENT :
RPS PLANNING & DEVELOPMENT

PROJECT :
STRUCTURAL SURVEYS TO 4NR REEMA FLATS BLOCKS IN MILTON KEYNES

TITLE :
COMMUNAL STAIRCASE FIRST FLOOR PLAN
SAWLEY HOUSE

DRAWN BY :	SM	APPROVED BY :	
DATE :	03-07-2013	DATE :	
SCALE :	1:20	ORIGINAL DRAWING SIZE 841 x 594 - A1	
DRAWING No :	111-(REEMA)-7551	REV :	

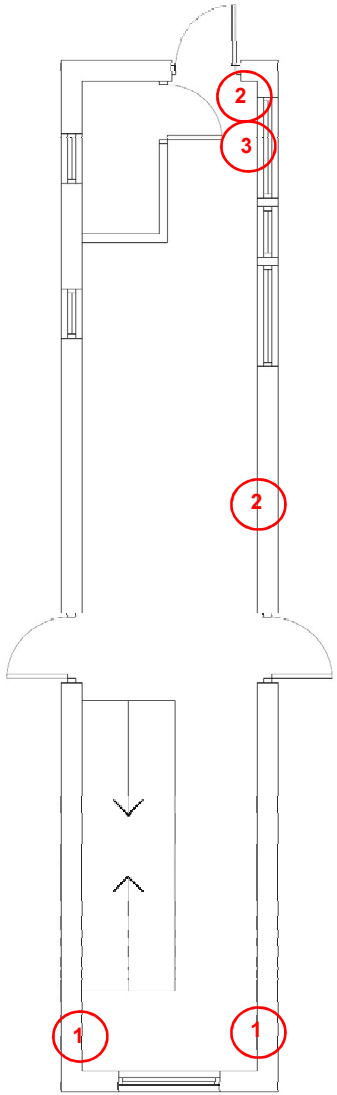

COMMUNAL STAIRCASE SECOND FLOOR PLAN

Do not scale from this drawing.
All dimensions must be checked on site by the contractor prior to the commencement of any fabrication or building works.
Where applicable, dimensions and details are to be read in conjunction with specialist consultant's drawings and/or other specifications any disparity is to be brought to the attention of Michael Dyson Associates Limited prior to the commencement of any fabrication or building works.
©This drawing is the property and copyright of Michael Dyson Associates Limited. It shall not be copied to any other party without the express written consent of an authorised director of Michael Dyson Associates Limited.

NOTES

Refer to Appendix G.6 for Internal Defects Log.

REV	DATE	AMENDMENTS	BY	APPD

Michael Dyson associates ltd
Excellence in Housing Consultancy
West House, Meltham Road, Honley,
Huddersfield HD9 6LB
t. 01484 666333 f. 01484 664186
w. www.mdyson.co.uk

CLIENT:
R5PS PLANNING & DEVELOPMENT

PROJECT:
STRUCTURAL SURVEY OF 4NR REEMA FLATS BLOCKS IN MILTON KEYNES

TITLE:
COMMUNAL STAIRCASE SECOND FLOOR PLAN SAWLEY HOUSE

DRAWN BY:	SM	APPROVED BY:	
DATE:	03.07.2018	DATE:	
SCALE:	1:30	ORIGINAL DRAWING SIZE 841 x 594 - A1	
DRAWING No:	112-(REEMA)-7551	REV	

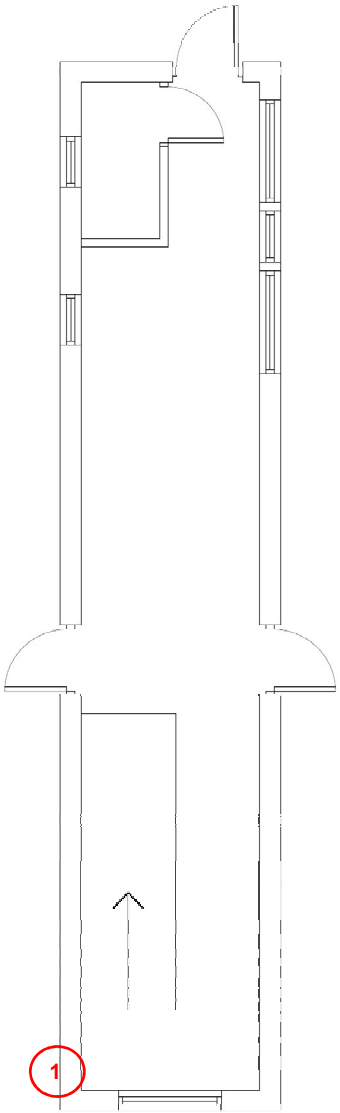

COMMUNAL STAIRCASE THIRD FLOOR PLAN

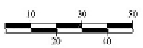

Do not scale from this drawing.
All dimensions must be checked on site by the Contractor prior to the commencement of any fabrication or building works.
Where applicable, dimensions and details are to be read in conjunction with specialist consultants' drawings and/or other specifications; any discrepancy is to be brought to the attention of Michael Dyson Associates Limited prior to the commencement of any fabrication or building works.
©This drawing is the property and copyright of Michael Dyson Associates Limited. It shall not be copied to any other party without the express written consent of an authorised director of Michael Dyson Associates Limited.

NOTES

Refer to Appendix G.6 for Internal Defects Log.

REV	DATE	AMENDMENTS	BY	APPD

Michael Dyson associates ltd
Excellence in Housing Consultancy
West House, Meltham Road, Honley,
Huddersfield HD9 6LB
t. 01484 666666 f. 01484 664166
w. www.mdyson.co.uk

CLIENT :
RPS PLANNING & DEVELOPMENT

PROJECT :
STRUCTURAL SURVEY TO 4NR REEMA FLATS BLOCKS IN MILTON KEYNES

TITLE :
COMMUNAL STAIRCASE THIRD FLOOR PLAN
SAWLEY HOUSE

DRAWN BY :	SM	APPROVED BY :	
DATE :	23-07-2013	DATE :	
SCALE :	1:10	ORIGINAL DRAWING SIZE : 841 x 594 - A1	
DRAWING No.	113-(Reema)-7551	REV.	

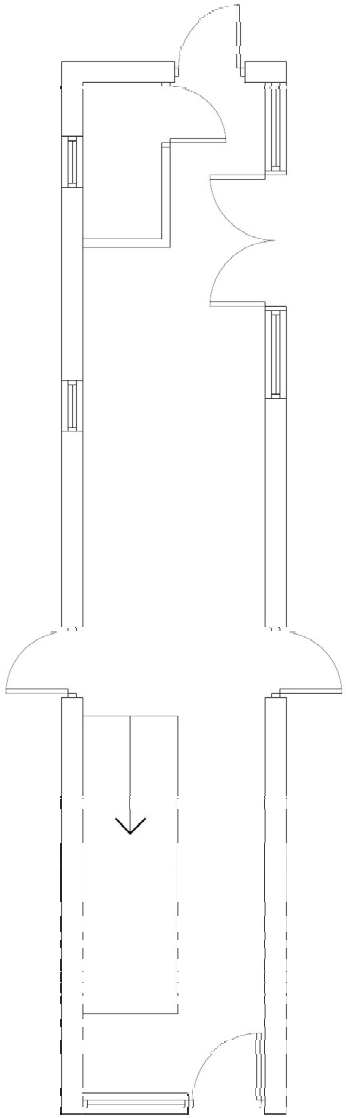

No Internal Defects

COMMUNAL STAIRCASE GROUND FLOOR PLAN

Do not scale from this drawing.
All dimensions must be checked on site by the Contractor prior to the commencement of any fabrication or building works.
Where applicable, dimensions and details are to be read in conjunction with specialist consultants' drawings and/or other specifications; any disparity is to be brought to the attention of Michael Dyson Associates Limited prior to the commencement of any fabrication or building works.
©This drawing is the property and copyright of Michael Dyson Associates Limited. It shall not be copied to any other party without the express written consent of an authorised director of Michael Dyson Associates Limited.

NOTES

Refer to Appendix G.6 for Internal Defects Log.

REV	DATE	AMENDMENTS	BY	APPD

Michael Dyson associates ltd
Excellence in Housing Consultancy
West House, Meltham Road, Hanley,
Huddersfield HD9 6LB
t. 01484 666888 f. 01484 694186
w. www.mdyson.co.uk

CLIENT :
RPS PLANNING AND DEVELOPMENT

PROJECT :
STRUCTURAL SURVEYS TO 4NR FLATS BLOCKS IN MILTON KEYNES

TITLE :
COMMUNAL STAIRS GROUND FLOOR PLANS, STIRLING HOUSE

DRAWN BY :	SM	APPROVED BY :	
DATE :	03-01-2013	DATE :	
SCALE :	1:30	ORIGINAL DRAWING SIZE 841 x 594 - A1	
DRAWING No :	410-(REEMA)-7551	REV	

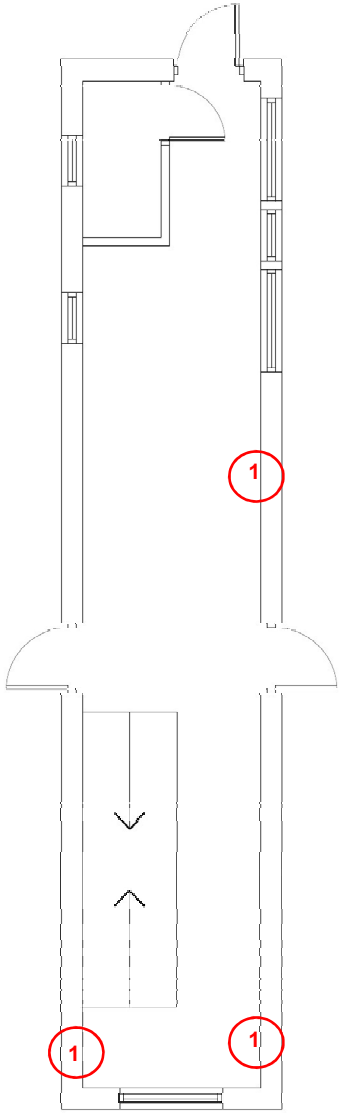

COMMUNAL STAIRCASE FIRST FLOOR PLANS

Do not scale from this drawing.
All dimensions must be checked on site by the Contractor prior to the commencement of any fabrication or building works.
Where appropriate, dimensions and details are to be read in conjunction with specialist consultants' drawings and/or other specifications; any discrepancy is to be brought to the attention of Michael Dyson Associates Limited prior to the commencement of any fabrication or building works.
©This drawing is the property and copyright of Michael Dyson Associates Limited. It shall not be copied to any other party, without the express written consent of an authorised director of Michael Dyson Associates Limited

NOTES

Refer to Appendix G.6 for Internal Defects Log.

REV	DATE	AMENDMENTS	BY	APPD

Michael Dyson associates ltd
Excellence in Housing Consultancy
West House, Meltham Road, Honley,
Huddersfield HD9 6LB
t. 01484 666888 f. 01484 664186
w. www.michaeldyson.co.uk

CLIENT :
RPS PLANNING & DEVELOPMENT

PROJECT :
STRUCTURAL SURVEYS TO 4NR REEMA FLATS BLOCKS IN MILTON KEYNES

TITLE :
COMMUNAL STAIRCASE FIRST FLOOR PLAN
STIRLING HOUSE

DRAWN BY :	SM	CHECKED BY :	
DATE :	06-01-2012	DATE :	
SCALE :	1:50	ORIGINAL DRAWING SIZE 841 x 594 - A1	
DRAWING No :	411-(REEMA)-7551	REV :	

10 50 30
20 40

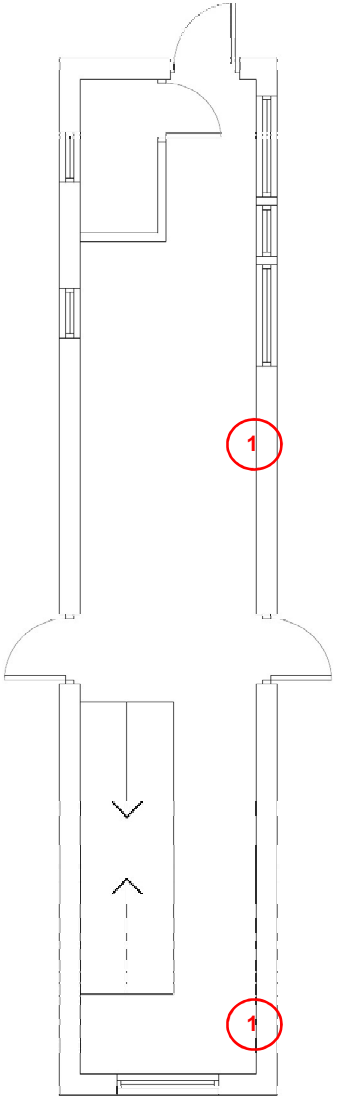

COMMUNAL STAIRCASE SECOND FLOOR PLANS

Do not scale from this drawing.
All dimensions must be checked on site by the Contractor prior to the commencement of any fabrication or building works.
Where applicable, dimensions and details are to be read in conjunction with specialist consultants' drawings and/or other specifications; any discrepancy is to be brought to the attention of Michael Dyson Associates Limited prior to the commencement of any fabrication or building works.
©This drawing is the property and copyright of Michael Dyson Associates Limited. It shall not be copied to any other party without the express written consent of an authorised director of Michael Dyson Associates Limited.

NOTES

Refer to Appendix G.6 for Internal Defects Log.

REV	DATE	AMENDMENTS	BY	APPD

Michael Dyson associates ltd
Excellence in Housing Consultancy
West House, Meltham Road, Henley,
Huddersfield HD9 6LB
t. 01484 666888 f. 01484 664186
w. www.mdyson.co.uk

CLIENT :
RSPS PLANNING & DEVELOPMENT

PROJECT :
STRUCTURAL SURVEY OF 4NR REEMA FLATS BLOCKS IN MILTON KEYNES

TITLE :
COMMUNAL STAIRCASE SECOND FLOOR PLAN STIRLING HOUSE

DRAWN BY :	SM	APPROVED BY :	
DATE :	08-03-2013	DATE :	
SCALE :	1:50	DESIGNED DRAWING SIZE 34.1 x 5934 - A1	
DRAWING NO :	412-(REEMA)-7551	REV.	

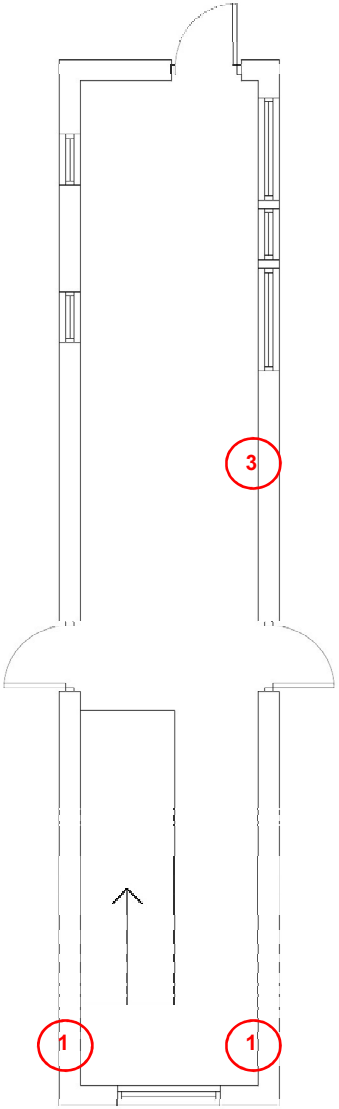

COMMUNAL STAIRCASE THIRD FLOOR PLAN

Do not scale from this drawing.
All dimensions must be checked on site by the Contractor prior to the commencement of any fabrication or building works.
Where applicable, dimensions and details are to be read in conjunction with specialist consultants' drawings and/or other specifications, any disparity to be brought to the attention of Michael Dyson Associates Limited prior to the commencement of any fabrication or building works.
© This drawing is the property and copyright of Michael Dyson Associates Limited. It shall not be copied to any other party without the express written consent of an authorised director of Michael Dyson Associates Limited.

NOTES

Refer to Appendix G.6 for Internal Defects Log.

REV	DATE	AMENDMENTS	BY	APPD

Michael Dyson associates ltd
Excellence in Housing Consultants
West House, Meltham Road, Honley,
Huddersfield HD9 6LR
t. 01484 666088 f. 01484 664186
w. www.mdyson.co.uk

CLIENT :
RPS PLANNING & DEVELOPMENT

PROJECT :
STRUCTURAL SURVEY TO 4NR REEMA FLATS BLOCKS IN MILTON KEYNES

TITLE :
COMMUNAL STAIRCASE THIRD FLOOR PLAN
STIRLING HOUSE

DRAWN BY :	SM	APPROVED BY :	
DATE :	03 07 2013	DATE :	
SCALE :	1:50	ORIGINAL DRAWING SIZE: 841 x 594 - A1	
DRAWING No :	413-(Reema)-7551	REV.	

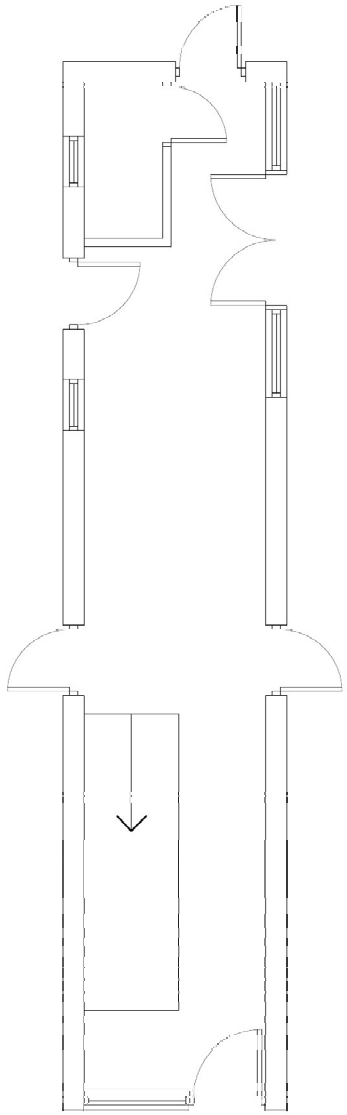

No Internal Defects

COMMUNAL STAIRCASE GROUND FLOOR PLAN

Do not scale from this drawing.
All dimensions must be checked on site by the Contractor prior to the commencement of any fabrication or building works.
Where applicable, dimensions and details are to be read in conjunction with specialist consultants' drawings and/or other specifications; any discrepancy is to be brought to the attention of Michael Dyson Associates Limited prior to the commencement of any fabrication or building works.
© This drawing is the property and copyright of Michael Dyson Associates Limited. It shall not be copied to any other party without the express written consent of an authorised director of Michael Dyson Associates Limited.

NOTES

Refer to Appendix G.6 for Internal Defects Log.

REV	DATE	AMENDMENTS	BY	APPD

Michael Dyson associates ltd
Experience in Housing Consultancy
West House, Waltham Road, Horley,
Huddersfield HD9 6LB
t. 01484 666666 f. 01484 664166
w. www.mdyson.co.uk

CLIENT :
RPS PLANNING AND DEVELOPMENT

PROJECT :
STRUCTURAL SURVEYS TO 4NR REEMA FLATS BLOCKS IN MILTON KEYNES

TITLE :
COMMUNAL STAIRS GROUND FLOOR PLANS, WALTHAM HOUSE

DRAWN BY :	SM	APPROVED BY :	
DATE :	03-07-2013	DATE :	
SCALE :	1:50	ORIGINAL DRAWING SIZE	841 x 594 - A1
DRAWING No.	210-(REEMA)-7551	REV.	

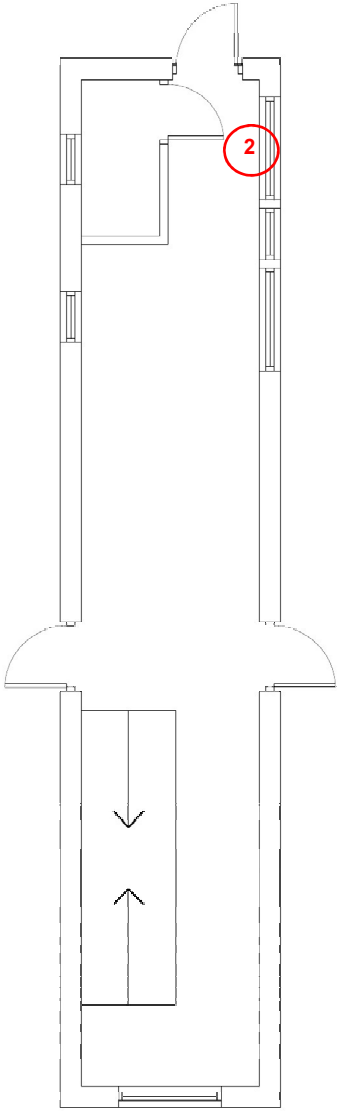

COMMUNAL STAIRCASE FIRST FLOOR PLAN

Do not scale from this drawing.
All dimensions must be checked on site by the Contractor prior to the commencement of any fabrication or building works.
Where applicable, dimensions and details are to be read in conjunction with specialist consultants' drawings and/or other specifications very diligently is to be brought to the attention of Michael Dyson Associates Limited prior to the commencement of any fabrication or building works.
With the drawing is the property and copyright of Michael Dyson Associates Limited. It shall not be copied to any other party without the express written consent of an authorised director of Michael Dyson Associates Limited.

NOTES

Refer to Appendix G.6 for Internal Defects Log.

REV	DATE	AMENDMENTS	BY	APPD

Michael Dyson associates ltd
Excellence in Housing Consultancy
West House, Meltham Road, Honley,
Huddersfield HD9 6LB
t. 01484 666888 f. 01484 664188
w. www.mdyson.co.uk

CLIENT :
RPS PLANNING & DEVELOPMENT

PROJECT :
STRUCTURAL SURVEYS TO 4NR REEMA FLATS BLOCKS IN MILTON KEYNES

TITLE :
COMMUNAL STAIRCASE FIRST FLOOR PLAN
WALTHAM HOUSE

DRAWN BY :	SJ	APPROVED BY :	
DATE :	03-07-2013	DATE :	
SCALE :	1:30	ORIGINAL DRAWING SIZE 841 X 594 - A1	
DRAWING No :	211-(REEMA)-7551	REV :	

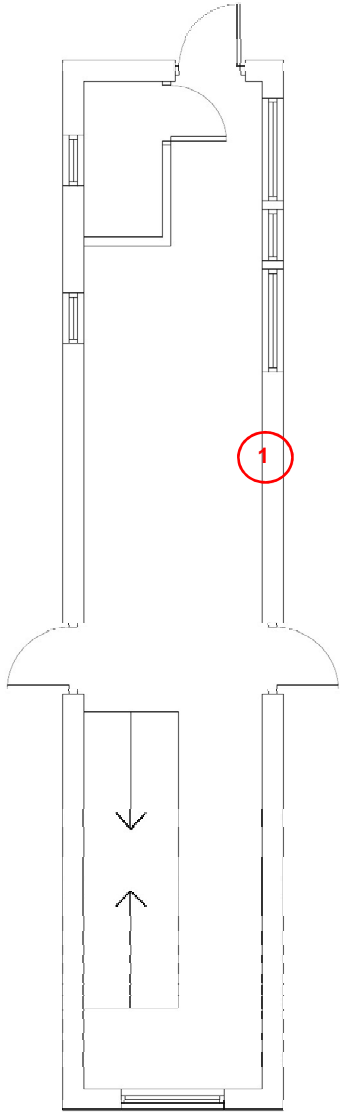

COMMUNAL STAIRCASE SECOND FLOOR PLAN

Do not scale from this drawing.
All dimensions must be checked on site by the Contractor prior to the commencement of any fabrication or building works.
Where applicable, dimensions or details are to be read in conjunction with specialist consultants' drawings and/or other specifications; any disparity is to be brought to the attention of Michael Dyson Associates Limited prior to the commencement of any fabrication or building works.
©This drawing is the property and copyright of Michael Dyson Associates Limited. It may not be copied to any other party without the express written consent of an authorised director of Michael Dyson Associates Limited.

NOTES

Refer to Appendix G.6 for Internal Defects Log.

REV	DATE	AMENDMENTS	BY	APPD

Michael Dyson associates ltd
Experience in Housing Consultancy
West House, Waltham Road, Honley,
Huddersfield HD9 6LB
t. 01484 666666 f. 01484 664108
w. www.mdyson.co.uk

CLIENT
R3PS PLANNING & DEVELOPMENT

PROJECT
STRUCTURAL SURVEY OF 4NR REEMA FLATS BLOCKS IN MILTON KEYNES

TITLE :
COMMUNAL STAIRCASE SECOND FLOOR PLAN WALTHAM HOUSE

DRAWN BY :	EM	APPROVED BY :	
DATE :	06/06/2013	DATE :	
SCALE :	1:50	PAPER SIZE :	A1
DRAWING No :	212-(REEMA)-7551	REV :	

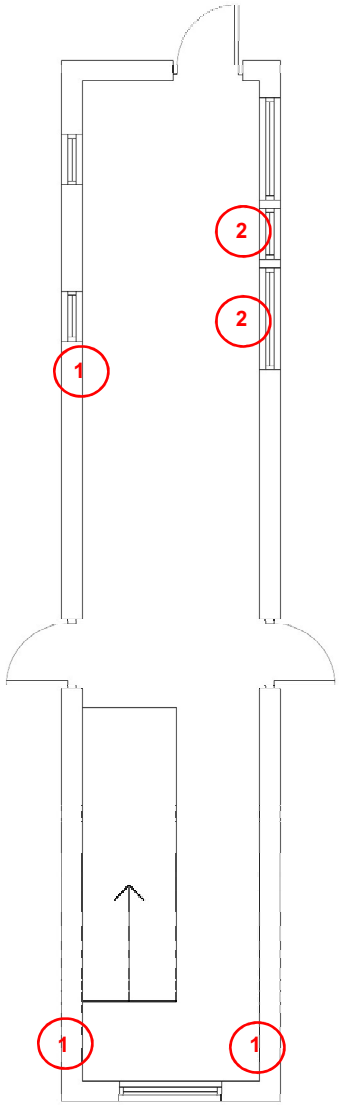

COMMUNAL STAIRCASE THIRD FLOOR PLANS

Do not scale from this drawing.
All dimensions must be checked on site by the Contractor prior to the commencement of any fabrication or build (on or off) work.
Where applicable, dimensions and details are to be read in conjunction with specialist consultants' drawings and other specifications, are dependent to be brought to the attention of Michael Dyson Associates Limited prior to the commencement of any fabrication or building work.
©This drawing is the property and copyright of Michael Dyson Associates Limited. It shall not be copied to any other party without the express written consent of an authorised director of Michael Dyson Associates Limited.

NOTES

Refer to Appendix G.6 for Internal Defects Log.

REV	DATE	AMENDMENTS	BY	APPD

Michael Dyson associates ltd
excellence in housing consultancy
West House, Maltham Road, Honley,
Huddersfield HD9 6LB
t. 01484 666888 f. 01484 664188
w. www.mdyson.co.uk

CLIENT :

RPS PLANNING & DEVELOPMENT

PROJECT :

STRUCTURAL SURVEY TO 4NR REEMA FLATS BLOCKS IN MILTON KEYNES

TITLE :

COMMUNAL STAIRCASE THIRD FLOOR PLAN WALTHAM HOUSE

DRAWN BY :	SH	APPROVED BY :	
DATE :	10-07-2013	DATE :	
SCALE :	1:20	ORIGINAL DRAWING SIZE BA1 x 594 - A1	
DRAWING No :	213-(Reema)-7551	REV	

H.1 Housing Defects Legislation

In 1981 a prefabricated reinforced concrete (PRC) Airey house type of Barnsley was found to be in an advanced state of decay during investigations following a fire that had burned out a neighbouring property. Building Research Establishment (BRE) were alerted to the problem and undertook a random inspection of Airey houses throughout the UK, publishing their report in 1982. Building Societies subsequently blighted all the approximately 30,000 Airey houses that had been built, refusing to accept them as security for mortgage lending.

Subsequently, BRE investigated other PRC house types. Upon receipt of the reports on their findings, Building Societies blighted these too, making them unmortgageable. Between 250,000 and 300,000 properties, in total, were affected, most of which were in public ownership but about 30,000 of which had been sold under the Right to Buy Legislation.

As a consequence, the Government introduced the Housing Defects Act 1984 (HDA), later incorporated in the Housing Act 1985 and the Housing (Scotland) Act 1987. This legislation designated 26 PRC housing systems as 'defective dwellings' due to insufficient depth of embedment of the reinforcement within the concrete. In practical terms the legislation required Local Authorities to offer financial assistance to qualifying private owners of PRC properties either through re-purchase or a repair grant.

H.2 Restoring Mortgageability to Designated Defective PRC Properties

H.2.1 PRC Homes Limited

Since the 1960s the Building Societies Association (BSA), now renamed the Council of Mortgage Lenders, has had a working liaison with the National House Building Council (NHBC). NHBC was an association funded by builders dedicated to improving standards, and BSA, because it had become concerned about building quality, became an active supporter of the Certification scheme set up by NHBC. It is now accepted practice for a builder to sell a new house with an NHBC (or similar) certificate. (There are now other bodies which also offer similar insurance backed 10-year warranties covering building defects). Resulting from the growth of the Certification scheme, NHBC became in practice an insurance company.

The impasse caused by the absence of technical standards in the Housing Defects Legislation, led to a reluctant NHBC being persuaded to set standards and guarantee concrete houses repaired with grant aid under the Housing Defects Legislation. NHBC set up a wholly-owned subsidiary, PRC Homes Limited, to fulfil this function.

PRC Homes Limited devised a scheme setting minimum standards for repairs to designated PRC house types that once repaired, could be provided with an NHBC supported warranty. To comply, PRC components not covered by a British Standard must either be removed or isolated and made redundant.

© Michael Dyson Associates Ltd.

Building Societies generally accepted PRC Homes Limited warranties for repaired concrete houses on the same terms as NHBC certificates for new build properties.

More recently, Government attitudes to public housing have been changing, in particular encouraging Housing Associations and other Registered Social Landlords to take over Local Authority housing stock with financial input from the private sector to fund improvements. Building Societies wished to invest in this market but their former condemnation of privately-owned PRC houses, except those repaired at great expense through the PRC Homes Limited scheme, unwittingly also blighted houses they now had an interest in improving through their funding.

H.2.2 NTHAS

In 1991, two mortgage lenders, Abbey National and Nationwide Anglia Building Society, in association with a panel of Engineers of which MDAL is a founder, set up the Non-Traditional Housing Appraisal Scheme (NTHAS). This scheme, unlike the old PRC Homes Limited scheme, does not automatically condemn all reinforced concrete. Testing is carried out to establish the condition of the concrete, and appropriate measures are then applied to restore structural integrity. When mortgageability is an issue, this Scheme can be used to restore that status to houses. Regardless of questions of mortgageability, the NTHAS approach is a rational way of considering and safeguarding the future of Non-Traditional houses.

For concrete houses in many cases, an appropriate measure will be to externally insulate the houses and provide a masonry weather shield, together with modern standards of ventilation - in other words, wrap them up and keep the concrete warm and dry. Such repairs are often cheaper than those to PRC Homes Limited standards, which have sometimes proved beyond the financial resources of many Social Housing Landlords.

Determination of chloride contents within concrete structures is crucial to establishing if low cost repairs under NTHAS are viable. Scientific opinion on the quantity of chloride that can be permitted in concrete is still changing, and at present can be expressed only in terms of a range of unqualified degrees of risk of reinforcement corrosion. There is no absolute certainty that a given level of chloride is bound to cause, or not cause, deterioration. In accordance with BRE guidance, it is generally held that chloride contents below 0.4% of the cement content of the concrete have a negligible influence on rate of corrosion regardless of exposure to the weather. The NTHAS rules accept chloride contents up to 0.6% of the cement content in concrete that is, or will be, protected from the weather.

More recently, a similar scheme to NTHAS led by warranty insurer, Commercial Union, and supported by a number of lenders has also come into being. This generally follows the NTHAS technical rules, but with fewer restrictions on the outward appearance of repaired houses.

Both Zurich Mutual Insurance Group and Commercial Union can provide structural warranties to enhance the protection offered to mortgage lenders, where required.

© Michael Dyson Associates Ltd.

H.2.3 Mortgageability

It is important to clarify what is meant by mortgageability, since the position for a tenant (contemplating a RTB Application and almost certainly dependent upon a third party to grant a mortgage) is somewhat different from that of a social landlord wishing to raise finance for several properties with an established rent stream yield.

An essential difference is a lender's perception of risk; for a tenant this is usually viewed as a measure of loan to value and therefore fundamental to security considerations. Lenders are not in the habit of taking undue risks since their comfort is in the value of their security should they - through default - end up in possession.

When the problems of PRC properties came to light in the early 1980s, lenders hastily 'black listed' such stock, irrespective of their condition due to their potential defects. In 1985 lenders all agreed to adopt the uniform stance of accepting a PRC Homes Limited approved licensed repair scheme as the means to readmit such properties to the mortgage market place.

It soon became clear that universal adoption of the PRC Homes Limited standard of repair was not always technically justified, nor an affordable means of securing the future of such stock for many social housing landlords.

The introduction of the Non-Traditional Housing Appraisal Scheme and Commercial Union Scheme was intended to provide a more rational means through which social housing landlords could address the reinstatement of non-traditional properties without the wholesale condemnation of all the non-traditional structure. The principle of these schemes is to apply estate-wide measures of repair appropriate to the needs of the structure, which are identified through an extensive survey/testing programme.

The benefit, depending on existing condition, is potentially significant lower costs of repair where it is possible to retain non-traditional components, often by undertaking works that place them in a more controlled, protected environment to ensure their structural serviceability. However, there is not universal acceptance of these schemes by Lenders, with the consequence that mortgageability is restricted to certain lending groups; there is also an underlying question about what happens in the future when the mortgage term sought exceeds the design life of the reinstatement design, with most of these schemes being designed to a thirty year standard, but with an expectation that serviceable life will be extended for up to 50 years.

Lenders have blighted designated PRC systems refusing to accept them as suitable security for mortgage lending unless appropriate remedial works have been undertaken. The designation of PRC properties has, in practical terms, had the effect of casting a shadow over the question of mortgageability of all other non-traditional system type dwellings (no-fines, steel, timber framed constructions, etc) in varying degrees.

© Michael Dyson Associates Ltd.

It is only designated PRC systems that are affected by the 'defective' labelling and consequently most Lenders' Head Office will purport a view that they will lend against the security of other non-traditional systems on their merits. However, independent surveyors appointed by Lenders' Regional Offices in response to mortgage applications from applicants living in such properties are often adversely influenced by the stigma surrounding PRC properties. Consequently their reports are frequently written to create a less favourable view of such properties, causing Lenders' Branch Offices to either refuse mortgage applications or impose abnormal conditions restricting lending.

When considering long-term repair solutions to non-traditional stock it must be appreciated that a design solution that provides for, say a 30-year extension to structural life is not synonymous with mortgageability. The ease with which mortgages are granted on repaired non-traditional properties is largely determined by the extent to which the administrative process recognises that repairs have been progressed in accordance with one of a number of schemes approved by a Lenders' Head Office. Unfortunately different Lenders have varying requirements for both the type of scheme they will accept and terms applicable. Whilst policy in this regard is determined by Head Office this is comparatively complex; confusion, misinterpretation and misunderstanding can (and in our experience often does) result within the Local Branch who handle and process mortgage applications.

Accordingly, the only sure way to create future mortgage confidence in a design solution is to progress approval under a recognised scheme for the reinstatement of non-traditional properties. However, even this is not as easy as it could be since different Lenders attitudes to the available schemes varies and not all Lenders support the different schemes available. As a rule of thumb, it generally follows that the more you spend on the replacing non-traditional components, the more Lenders will subsequently grant mortgages on the repaired property.

The issue is further compounded because Lenders attitudes to mortgaging repaired non-traditional properties have altered since the introduction of the 1984 HDA. Previously, designated dwellings repaired in accordance with a PRC Homes Limited approved 'licensed' scheme would be accepted by virtually all Lenders, provided the repair was supported by an NHBC ten year insurance backed guarantee, even where the attached property remained unreinstated. However, today some lenders will now only consider mortgaging properties repaired under this scheme if all the properties in the block have been repaired to the same standard.

In 1996, PRC Homes Limited was wound up and consequently access to their warranty insurance for repaired properties was removed. Most Lenders' view at the time was that providing repairs were carried out to the same technical standards of a PRC Homes Limited licensed scheme (and they received suitable independent certification to this effect) this would be sufficient assurance to grant a mortgage without a requirement for warranties. However, more recently some Lenders have retreated and are now leaning towards the provision of warranties as a lending criterion.

© Michael Dyson Associates Ltd.

Unfortunately, there is no common policy between lenders and there now exists a plethora of alternatives making it an impossibly complex task for the 'layman' to attest to the most appropriate choice for his needs. Today, it has to be said, there are a number of consultants and contractors promoting the use of so called 'mortgageable' schemes where the validity of the mortgageability is somewhat dubious. This subject is complicated further by the varying administrative arrangements applicable to different schemes and the necessity to purchase 10-year structural warranty insurance as part of the package with some approaches.

Thus, the reality of the position for the tenant wishing to exercise his RTB post application of a 'mortgageable' reinstatement scheme is that he will be highly dependent upon the quality of the reinstatement scheme utilised and the nature of the arrangements in placed between those operating the scheme and the Lender(s) involved.

© Michael Dyson Associates Ltd.

Construction

Sikagard®-550 W Elastic

Crack bridging protective coating for concrete

Product Description

Sikagard®-550 W Elastic is a one part, plasto-elastic coating based on UV-curing acrylic dispersion with excellent crack-bridging properties even at temperatures below 0 °C.

Uses

- Protection and enhancement of concrete structures (normal and lightweight concrete), especially exposed concrete surfaces with a risk of cracking
- With concrete repair works as an elastic protective top coating on Sika® mortar thin layer levelling mortar (refer to product data sheet)

Characteristics / Advantages

- Crack-bridging even at low temperatures (-20 °C)
- High diffusion resistance against CO_2 reducing the rate of carbonation
- Water vapour permeable
- Very good resistance against weathering and ageing
- Can be diluted with water
- Environmentally friendly (solvent free)
- Reduced tendency to dirt pick up and contamination

Tests

Approval / Standards

Test according to ZTV SIBOS-D II from the Polymer Institute dd 16.10.01 Nr. P2438

Test according to ZTV SIBOS-D II from the Polymer Institute dd 16.10.01 Nr. P2436

The product is included in a compilation of tested products and systems as per OS 5a (OS DII) at the German Institute of Road Systems and is registered in the LCPC (French Laboratoire des Ponts et Chaussées) list of approved paint systems for civil engineering structures.

Product Data

Form

Appearance / Colours

Thixotropic liquid available in almost every colour shade.

Packaging

15 l oval plastic pail

Storage

Storage Conditions / Shelf-Life

12 months from date of production if stored properly in undamaged and unopened original sealed packaging in cool and dry conditions. Protect from direct sunlight and frost.

Technical Data

Chemical Base	Acrylate dispersion
Density	~ 1.39 kg/l (at +20°C)
Solid Volume	~ 53.4%
Solid Content	~ 66.1%
Layer Thickness	d_{minp} (minimum required thickness to achieve the required characteristics - CO_2 equivalent air thickness of 50 m and crack bridging) = 200 microns. D_{maxp} (maximum required thickness not to go beyond the H_2O equivalent air thickness of 4 m) = 1635 microns.

Carbon Dioxyde Diffusion Coefficient (μCO_2)

Dry film thickness	d = 337 µm
Equivalent air layer thickness	$S_{D,}$ CO_2 = 84 m
Diffusion coefficient CO_2	$\mu CO_2 = 2.5 \times 10^5$
Requirements for protection	≥ 50 m

Water Vapour Diffusion Coefficient (μH_2O)

Dry film thickness	d = 319 µm
Equivalent air layer thickness	$S_{D,}$ H_2O = 0.78 m
Diffusion coefficient H_2O	$\mu H_2O = 2.5 \times 10^3$
Requirements for breathability	≤ 4 m

Mechanical / Physical Properties

Elongation at Tear	Elongation at break at room temperature (not exposed to weathering): 63% Elongation at break at -20°C: 32%
Crack-Bridging Capacity	Class I_T according to ZTV SIB 90-TL/TP OS

System Information

System Structure

System	Product [1]	Number of applications
Priming [2]	Sikagard®-552 W Aquaprimer	1
Top coat	Sikagard®-550 W Elastic	2
Priming [2]	Sikagard®-552 W Aquaprimer	1
Intermediate coat [3]	Sikagard®-545 W Elastofill or Sikagard®-526 Porefiller	1 - 2
Top coat[4]	Sikagard®-550 W Elastic	2

Note[1]
Please refer to the respective data sheet for additional information.

Note[2]
For very difficult substrate (very dense or weak with tensile strength < 1 N/mm^2) and at low temperature, use solvent containing primer Sikagard®-551 S Elastic Primer.

Note[3]
The number of layer depends on the pore structure in order to achieve a pore-free surface.

Note[4]
In case of an intensive yellow or red colour shade and/or a dark substrate, more than two coats might be required.

Application Details

Consumption

Product	Per coat
Sikagard®-551 S Elastic Primer	~ 0.10 - 0.15 kg/m^2
Sikagard®-552 W Aquaprimer	~ 0.10 - 0.15 kg/m^2
Sikagard®-545 W Elastofill	~ 0.80 - 1.10 kg/m^2
Sikagard®-556 Porefiller	~ 0.20 - 0.30 kg/m^2
Sikagard®-550 W Elastic	~ 0.25 - 0.35 kg/m^2

Substrate Preparation

Exposed concrete without existing coating:

The surface must be dry, sound and free from loose and friable particles. Suitable preparation methods are steam cleaning, high pressure water jetting or blastcleaning.

New concrete must be at least 28 days old.

If required, a levelling pore sealer (e.g. Sika® MonoTop®-620, Icoment-520, Sikagard®-545 W Elastofill, Sikagard®-526 Porefiller etc.) should be applied. For cement based products, allow a curing time of at least 4 days before coating.

Exposed concrete with existing coating:

Existing coatings must be tested to confirm their adhesion to the substrate - adhesion test average >0,8 N/mm^2 with no single value below 0.5 N/mm^2.

Inadequate adhesion:
Existing coatings must be completely removed by suitable methods and the substrate must be sufficiently sound and suitable to be coated as above.

Adequate adhesion:
Thorough cleaning of all surfaces by steam cleaning or high pressure water jetting
For water based coating, use Sikagard-552 W Aquaprimer as primer.
For solvent based coating, use Sikagard-551 S Elastic Primer as primer.

In case of doubt, carry out adherence testing to determine which primer is most suitable - wait at least 2 weeks prior to conduct the adhesion test - an average value of 0.8 N/mm² is required with no single value below 0.5 N/mm².

Application Conditions / Limitations

Substrate Temperature	+8°C min. / +30°C max.
Ambient Temperature	+8°C min. / +30°C max.
Relative Air Humidity	< 80%
Dew Point	Temperature must be at least 3°C above dew point.

Application Instructions

Mixing

The materials are supplied ready for use. Stir thoroughly prior to application.

Application Method / Tools

Apply Sikagard®-551 S Elastic Primer or Sikagard®-552 W Aquaprimer evenly onto the substrate. For use on very dense substrates up to 10% Sika Thinner C may be added to Sikagard®-551 S Elastic Primer.

Sikagard®-550 W Elastic can be applied by brush, roller or airless spray.

Cleaning of Tools

Clean all tools and application equipment with clean water immediately after use. Hardened / cured material can only be removed mechanically.

For Sikagard®-551 S Elastic Primer use Sika® Thinner C.

Waiting Time / Overcoatability

Waiting time between coats at +20°C substrate temperature:

Previous coating	Waiting time	Next coating
Sikagard®-552 W Aquaprimer	5 hours min.	Sikagard®-550 W Elastic
Sikagard®-551 S Elastic Primer	18 hours min.	Sikagard®-550 W Elastic
Sikagard®-550 W Elastic	8 hours min.	Sikagard®-550 W Elastic

Note: When application is on existing coatings, the waiting time for both primers will increase by 100%.

Refresher coats of Sikagard®-550 W Elastic can be applied without priming if the existing coat has been thoroughly cleaned.

Notes on Application / Limitations

Do not apply when there is:

- Expected rain
- Relative humidity >80%
- Temperature below +8°C and/or below dew point
- Concrete younger than 28 days

The system is resistant to aggressive atmospheric influences.

Curing Details

Curing Treatment

Sikagard®-550 W Elastic does not require any special curing but must be protected from rain for at least 4 hours at +20°C.

Applied Product ready for use

Full cure: ~ 7 days at +20°C

Value Base

All technical data stated in this Product Data Sheet are based on laboratory tests. Actual measured data may vary due to circumstances beyond our control.

Local Restrictions

Please note that as a result of specific local regulations the performance of this product may vary from country to country. Please consult the local Product Data Sheet for the exact description of the application fields.

Health and Safety Information

For information and advice on the safe handling, storage and disposal of chemical products, users should refer to the most recent Material Safety Data Sheet containing physical, ecological, toxicological and other safety-related data.

Construction

Legal Notes

The information, and, in particular, the recommendations relating to the application and end-use of Sika products, are given in good faith based on Sika's current knowledge and experience of the products when properly stored, handled and applied under normal conditions in accordance with Sika's recommendations. In practice, the differences in materials, substrates and actual site conditions are such that no warranty in respect of merchantability or of fitness for a particular purpose, nor any liability arising out of any legal relationship whatsoever, can be inferred either from this information, or from any written recommendations, or from any other advice offered. The user of the product must test the product's suitability for the intended application and purpose. Sika reserves the right to change the properties of its products. The proprietary rights of third parties must be observed. All orders are accepted subject to our current terms of sale and delivery. Users must always refer to the most recent issue of the local Product Data Sheet for the product concerned, copies of which will be supplied on request.

Sika Limited
Watchmead
Welwyn Garden City
Hertfordshire
AL7 1BQ
United Kingdom

Phone +44 1707 394444
Telefax +44 1707 329129
www.sika.co.uk, email: sales@uk.sika.com

ISO 14001 ISO 9001

PRODUCT AND COMPANY IDENTIFICATION

Product Code	SGD55W
Product Name	Sikagard 550W Elastic
Product Description	Water based pigmented elastomeric protective coating for concrete.
Manufacturer/Supplier	Sika Limited Watchmead Welwyn Garden City Hertfordshire. AL7 1BQ tel. 01707 394444 Fax. 01707 329129

COMPOSITION/INFORMATION ON THE COMPONENTS

Hazardous Components in Product	The product does not contain any substances classified as hazardous under current regulations.
Chemical Characteristic	Pigmented paint based on aqueous copolymer dispersion.

HAZARD IDENTIFICATION

Main Hazards	Not classified as hazardous.

FIRST AID MEASURES

Eye Contact	Immediately flood the eye with plenty of water for at least 15 minutes, holding the eye open. Eyelids should be held away from the eyeball to ensure thorough rinsing. Obtain medical attention if soreness or redness persists.
Skin Contact	Wash skin thoroughly with soap and water. If material proves difficult to remove, use suitable skin cleanser (not solvent). Contaminated clothing should be washed or dry-cleaned before re-use.
Ingestion	Wash out mouth with water. Have victim drink 240-300ml of water. If vomiting occurs naturally, rinse mouth and repeat administration of water. Obtain medical attention.
Inhalation	Remove from exposure. Unlikely to occur.However provide symptomatic medical treatment if required.

FIRE FIGHTING MEASURES

Extinguishing Media	Not combustible. Select extinguishing agent appropriate to other materials involved.
Special Hazards of Product	Combustion will produce smoke,carbon dioxide and carbon monoxide. See also Section 10.
Protective Equipment for Fire-Fighting	Wear self contained breathing apparatus.

ACCIDENTAL RELEASE MEASURES

Personal Precautions	Wear appropriate protective clothing.
Environmental Precautions and Clean-up Methods	Try to prevent the material from entering drains or water courses.
Spillages	Contain and absorb using earth, sand or other inert material. Transfer into suitable containers for recovery or disposal. Small spillages may be flushed with large quantities of water.

HANDLING AND STORAGE

Handling	Use in well ventilated area. Avoid contact with eyes, skin and clothing. Keep container tightly closed when not in use.
Storage	Storage area should be: cool. dry. Store in original containers. Protect from extremes of cold. Storage temperature should be controlled to between 5 and 25 °C.

EXPOSURE CONTROLS/PERSONAL PROTECTION

Occupational Exposure Standards	None assigned.
Engineering Control Measures	Use of the basic principles of Industrial Hygiene will enable this material to be used safely.
Respiratory Protection	Respiratory protection not normally required.
Hand Protection	Wear suitable impervious gloves.
Eye Protection	Wear safety glasses if risks of accidental contamination are possible during application.

PHYSICAL AND CHEMICAL PROPERTIES

Physical State	Viscous liquid.
Color	Various
Odor	Mild
Flash Point °C	Not applicable.
Solubility - Water	Partly miscible
Density (kg/m3)	1350 - 1390 at 20 °C.
Viscosity (at 20°C)	Approx. 9000 at 20 °C. (measured as mPa.s)

STABILITY AND REACTIVITY

Stability	Stable under normal conditions.
Conditions to avoid	Protect from frost
Materials to avoid	None under normal conditions.
Hazardous Decomposition Products	After evaporation of water, combustion will generate: oxides of carbon. acrylic monomers, acrid smoke and irritating fumes.

TOXICOLOGICAL INFORMATION

Acute toxicity	Low order of acute toxicity.
Eye irritation	May cause slight transient irritation.
Skin irritation	Frequent or prolonged skin contact may cause some local short term skin irritation.

ECOLOGICAL INFORMATION

Mobility	Mobile liquid. Emulsifiable in water.
Bioaccumulative potential	Product is not expected to bioaccumulate.
Ecotoxicity	Maybe harmful to aquatic species

DISPOSAL

Product Disposal	Arrange for disposal via a licensed waste contractor.
Container Disposal	Dispose of containers with care. Containers should be cleaned by appropriate methods and then re-used or disposed of by landfill or incineration as appropriate. Empty packaging should be removed by a licensed waste contractor.

TRANSPORT INFORMATION

ADR/RID Proper shipping name	Not Regulated under ADR/RID
IMDG : Proper shipping name	Not Regulated under IMDG
IATA : Proper shipping name	Not Regulated under ICAO

REGULATORY INFORMATION

Risk Phrases	None assigned.
Safety Phrases	None assigned

OTHER INFORMATION

First Issue Date	14.11.1995
Revisions Highlighted	Physical and Chemical Properties Regulatory Information
Uses and Restrictions	Customers are urged to ensure that the product is entirely suitable for their own purpose.It is the customer`s responsibilty to ensure that a suitable and sufficient assessment of the risks created by the use of the product is undertaken.
UK Legislation	Health and Safety at Work etc Act, 1974, and relevant Statutory Provisions. SI 1993/1746: Chemicals (Hazard Information and Packaging) Regulations, 1993. SI 1999/437: The Control of Substances Hazardous to Health Regulations SI No 2839 1991 Environmental Protection (Duty of Care) Regulations.
UK Guidance Publications	General Approved Code of Practice to COSHH Regulations, HSE.

Footnote

The information contained in this SDS corresponds to our level of knowledge at the time of publication.All warranties are excluded.Our most current General Sales Conditions shall apply. Please consult the Technical Data Sheet prior to use.

EC Declaration of Conformity
Edition Jan-09

Construction

EN 1504-2 09 0921-BPR-2046

The undersigned representing the following:

Sika Services AG
Tüffenwies 16
CH-8048 Zürich
Factory 1125
Switzerland

Herewith declare that the product

Sikagard®-550 W Elastic

is in conformity with the provision of the following EC Directives when applied in accordance with the instructions contained in the product documentation:

89/106/EC

Construction Product Directive

And that the standard referenced below has been applied:

EN 1504-2:2004

Surface Protection System for Concrete – Coatings
Conforming to the Annex ZA Table 1d & 1e
Principle 1: Protection against ingress (method 1.3)
Principle 2: Moisture control (method 2.3)
Principle 8: Increasing resistivity (method 8.3)

Notified Body: **Q**ualitätsgemeinschaft **D**eutsche **B**auchemie (QDB)
0921

Prepared by

Paul Schelbert
Senior Manager
Sika Services AG

Michel Donadio
Technical Manager Refurbishment
Sika Services AG

Documents attached:
- FPC Certificate
- EC Accompanying Document

Sika Services AG
Tüffenwies 16
CH-8048 Zürich
Switzerland

Phone +41 44 436 40 40
Telefax +41 44 436 46 86
www.sika.com

Responsible Care

Certified Quality System ISO 9001/EN 29001 since 1986

Acrylic-polymer modified, high-build structural repair mortar

weber.cem HB40

Uses

- Structural concrete repairs, particularly where high, overhead build is required
- Repairs to bridge and highway structures
- Repairs to car park soffits, bridge decks and columns

Features and benefits

- Lightweight, low-density structural repair mortar which allows speedier completion of work
- High-build properties – up to 75 mm vertically and 50 mm in a soffit repair, without formwork
- Unique shrinkage compensation system provides long-term dimensional stability. Less than 0.02% shrinkage at 28 days
- Contains fibres and spray dried acrylic polymer
- Low permeability to water, carbon dioxide and chlorides
- Easy to apply, with excellent application properties
- This product has been formulated to comply with the requirements of BS EN 1504-3:R3 mortar
- Complies with Department of Transport Departmental Standard BD 27/86

About this product

weber.cem HB40 is a single-component, polymer-modified, high-build cementitious mortar, designed for structural concrete repairs. It requires only the addition of clean water to produce a lightweight, low-permeability, high-strength mortar for both soffit and vertical repair situations. The mortar is suitable for repairs to bridges and other structures as specified by the Department of Transport.

This product has been formulated to comply with the requirements of BS EN 1504-3:R3 mortar.

Technical data

All test results were obtained at 20°C, unless otherwise stated. 2.5 litres of water per 20 kg bag

Compressive strength* BS EN 12190:1999	3 days 7 days 28 days	30 MPa 35 MPa 43 MPa
Flexural strength	28 days	5.3 N/mm²
Tensile strength	28 days	3.3 N/mm²
Modulus of elasticity in compression BS EN 13412:2006	28 days	16.6 kN/mm²
Drying shrinkage (25 x 25 x 285 mm prisms) 25°C, 50% RH	28 days	< 200 microstrain
Carbon dioxide barrier, equivalent concrete thickness at 10 mm (Taywood method)		250 mm
Water absorption ISAT (BS 1881-208:1996)	10 min.	0.02 ml/m²/sec
Bulk density BS EN 12190: 1999 :		1540 kg/m³
Fresh wet density		> 1500 kg/m³
Working time		30 – 45 minutes

* Value obtained in laboratory conditions.
Achievement at 28 days strength is dependent on site conditions, water addition and application technique.
Typically, compressive strength will vary between 25 and 35 N/mm² at 28 days.

Performance to BS EN 1504-3

Test results – all intended uses

Performance characteristic	Method	BS EN 1504-3 requirement	Result
Compressive strength	EN 12190	≥ 25 MPa	45 MPa
Chloride ion content	EN 1015-17	≤ 0.05%	0.02%
Adhesive bond	EN 1542	≥ 1.5 MPa	1.7 MPa
Restrained shrinkage/ expansion	EN 12617-4	Bond strength after test ≥ 1.5 MPa	1.9 MPa
Carbonation resistance	EN 13295	d_k ≤ control concrete (1.3)	0.3

Test results – certain intended uses

Performance characteristic	Method	BS EN 1504-3 requirement	Result
Elastic modulus	EN 13412	≥ 15 GPa	16.6 GPa
Thermal compatibility Part 2 Thunder shower	EN 13687-2	Bond strength after 30 cycles ≥ 1.5 MPa	2.0 MPa
Thermal compatibility Part 4 Dry cycling	EN 13687-4	Bond strength after 30 cycles ≥ 1.5 MPa	1.8 MPa
Coefficient of thermal expansion	EN 1770	Declared value	12.0 x 10^{-6}/°C
Capillary absorption	EN 13057	≤ 0.5 $kgm^{-2}h^{-0.5}$	0.05 $kgm^{-2}h^{-0.5}$

A full set of independent test results is available on application

FM 1209

weber.cem HB40

Preparation

Concrete substrates
Concrete substrates must be adequately prepared by use of scabbling, grit blasting, needle gunning or other means, as appropriate. Oil and grease must be removed by steam cleaning together with suitable detergent. Any contaminated concrete must be removed. All damaged concrete should be cut back to a sound surface and at least 15 mm behind any exposed reinforcement.
New concrete must be at least 14 days old. Thoroughly saturate the concrete but remove excess water.

Steel substrates
These should be grit blasted to Swedish Standard SA 2½ equivalent to BS 7079-A1 and degreased immediately prior to application. Where corrosion is absent, wire brushing to a clean, bright surface may be adequate. Care must be taken not to polish the rust. Apply a protective coating of **weber.cem bondcoat** as described below to act as a holding primer.

Note: Preparation of both concrete and steel must achieve a clean, sound, roughened surface.

Mixing

Mixing of bonding slurry
Mix 2.5 volumes of **weber.cem bondcoat** powder to 1 volume of clean water. Mix vigorously to a brushable, slurry consistency.

For detailed application instructions, see separate **weber.cem bondcoat** data sheet.

Mixing weber.cem HB40
A low-shear, forced-action mixer must be used, e.g. Mixal Mixer or Creteangle. Hand mixing the mortar is not recommended.

Mix for 2 minutes from adding the powder to the water.

Over mixing will entrain air and reduce compressive strength. Do not overmix.

Water addition is 2.4 to 2.7 litres of clean water per 20 kg bag. Start at 2.4 litres and adjust as required upwards to 2.7 litres.

Do not add more than 2.7 litres of water.

Application

Priming of steel reinforcement
Apply one full, unbroken coat of **weber.cem bondcoat**, ensuring the back of the cleaned reinforcing bars are coated.

Priming of concrete substrate
Ensuring the prepared concrete substrate is saturated but surface damp, use a stiff brush to scrub the slurry well into the surface.

Apply the mortar to the substrate whilst the bonding slurry is still tacky and compact well into place, ensuring no air is trapped.

The minimum application thickness is 10 mm. Where very thick sections are required, multiple applications may be necessary. Intermediate surfaces should be scratched to give a good mechanical key.

Successive applications require the use of **weber.cem bondcoat.**

Finishing
If subsequent materials or coatings are to be applied, finish with a wooden or plastic float or sponge to present a lightly textured surface. Otherwise, finish with a steel float for a tightly closed surface.

Curing
Unless a levelling mortar, coating, inhibitor, sealer or other system is to be applied to the surface, cure immediately after finishing with a suitable membrane.

Before application of a coating or a levelling mortar, cure the repairs by covering with closely-fitting polyethylene sheeting or use **weber.tec latex** as an intermediate curing membrane sprayed onto the repaired surfaces in a continuous film.

weber.tec HB40 can be overcoated by the levelling mortar **weber.cem fairing coat** or one of the anti-carbonation coatings in the **weber.cote** range. Overcoating times are dependent on weather conditions.

When cured, **weber.cem HB40**, and **weber.cem bondcoat** are stable to freeze/thaw conditions but, following good concreting practice, they should not be applied in freezing weather or onto frozen surfaces or at temperatures below 5°C.

Packaging

weber.cem HB40 is supplied in 20 kg bags.

Coverage

weber.cem HB40
Approximately 15.0 litres per 20 kg bag, i.e. 67 bags per m³ or 1.5 m² per bag at 10 mm thickness.

weber.cem bondcoat
Approximately 5 kg per 1 m².

Storage and shelf life

When stored unopened in a dry place at temperatures above 5°C, shelf life is 12 months from date of manufacture.

Health and safety

Contains cement (Contains chromium (VI). May produce an allergic reaction). Harmful by inhalation. Irritating to eyes and skin. Keep out of the reach of children. In case of contact with eyes, rinse immediately with plenty of water and seek medical help. After contact with skin, wash immediately with plenty of soap and water. Wear suitable protective clothing, gloves and eye/face protection.

For further information, please request the Material Safety Data Sheet for this product.

Technical services

Weber's Customer Services Department has a team of experienced advisors available to provide on-site advice both at the specification stage and during application. Detailed specifications can be provided for specific projects or more general works. Site visits and on-site demonstrations can be arranged on request.

Technical helpline
Tel: 01525 722100
Fax: 01525 718988
e-mail solutions@netweber.co.uk

Sales enquiries

Weber products are distributed throughout the UK through selected stockists and distributors. Please contact the relevant Customer Services Team below for all product orders and enquiries.

England and Wales
Tel: 01525 722100
Fax: 01525 718988
e-mail sales@netweber.co.uk

Scotland, Northern Ireland, Isle of Man, Republic of Ireland
Tel: 028 9335 2999
Fax: 028 9332 3232
e-mail sales@netweber.co.uk

Saint-Gobain Weber Ltd
Dickens House, Enterprise Way, Maulden Road, Flitwick, Bedford MK45 5BY, UK
Tel: 01525 722100 Fax: (01525) 718988 e-mail: mail@netweber.co.uk
www.netweber.co.uk

To the best of our knowledge and belief, this information is true and accurate, but as conditions of use and any labour involved are beyond our control, the end user must satisfy himself by prior testing that the product is suitable for his specific application, and no responsibility can be accepted, or any warranty given by our Representatives, Agents or Distributors. Products are sold subject to our Standard Conditions of Sale and the end user should ensure that he has consulted our latest literature.

weber SAINT-GOBAIN

MATERIAL SAFETY DATA

EDITION: 5 DATE: OCTOBER 2012

1. PRODUCT

NAME: **weber.cem HB40**

Chemical Nature

Odourless powder containing granular material which is insoluble in water.

Manufacturer

weber
Saint-Gobain Weber Limited
Dickens House
Enterprise Way
Flitwick
Bedford.
MK45 5BY.

EMERGENCY TELEPHONE NUMBER. 08703 330070

2. HAZARDS IDENTIFICATION

EEC symbol: Xi R Phrases: 36/38, 41

Contains chromium (VI). May produce an allergic reaction.
When mixed with water or on contact of powder with body fluids, produces a strongly alkaline solution. This may cause serious burns and ulceration both to the skin and eyes. Until set these products may cause dermatitis due to either their high alkalinity or hexavalent chromium salts present in Portland Cement. The dry powder contains some respirable silica flour – raising dust must therefore be avoided

3. COMPOSITION

Consists of a polymer modified mixture of silica sand, hydraulic cement, (Portland Cement, C.A.S. No. 65997-15-1), and small quantities of other additives

4. FIRST AID MEASURES

SKIN CONTACT: Wash the affected area thoroughly with soap and water. If irritation continues seek medical advice. Clothing contaminated with wet product should be removed and washed thoroughly before re-use

EYE CONTACT: A speedy response is essential to prevent permanent damage to the eyes. Wash eyes immediately with plenty of clean water for at least 15 minutes and seek medical advice without delay

INHALATION: Move affected person to fresh air. If nose or airways become inflamed, seek medical attention

INGESTION: If swallowing has occurred do not induce vomiting. Give person plenty of water to drink. Seek medical attention

5. FIRE-FIGHTING MEASURES

This product is not flammable and will not facilitate combustion of other materials

Exposure hazards

Do not release water contaminated with these products into surface water drains

6. ACCIDENTAL RELEASE MEASURES

Personal Precautions

Avoid contact with skin eyes and clothing. Avoid breathing dust. Refer to **Section 8** for correct personal protective equipment and **Section 7** for safe handling.

Environmental Precautions

Prevent contamination of surface water. Do not allow into watercourses and drains.

Methods for Cleaning

Recover spillages in dry state if possible (e.g. using an industrial vacuum cleaner with high efficiency particulate filter (HEPA filter). Minimise generation of airborne dust. The product can be slurried with water. Keep children away from clean-up operations. Dispose to a place authorised to accept builder's waste.

7. HANDLING AND STORAGE

Handling

When handling bags of product, due regard should be paid to Manual Handling Operations Regulations. Some bags may have a small amount of cement dust on their outer surface. Appropriate personal protection should be used whilst handling (refer to **Section 8**).

Storage

Bags should be stacked in a safe and stable manner. Store in dry conditions.

8. EXPOSURE CONTROLS / PERSONAL PROTECTION

Technical Protective Measures

No special measures required

Exposure Limits

Workplace Exposure Limit (OES 8 hour TWA):

Total inhalable dust	10mg/m³
Total respirable dust	4mg/ m³

Respiratory Protection

Suitable respiratory protection should be worn to ensure that personal WEL is not exceeded.

Hand Protection

Wear suitable gloves (waterproof and abrasion and alkali resistant).

Eye Protection

Suitable goggles or face protection should be worn wherever there is a risk of powder or wet mix entering the eye.

Skin Protection

Wear overalls and closed footwear.

9. PHYSICAL AND CHEMICAL PROPERTIES

Physical state:	Particulate
Particle size:	5 to 500 microns
Density:	1.50-1.80g/cm^3 approx.
Solubility:	Slight.
pH:	10.5 approx. (when mixed with water)

10. STABILITY AND REACTIVITY

Stable under normal room temperature and conditions. Bags will set solid if continually soaked with water.

No hazardous decomposition products are generated from this product.

11. TOXICOLOGICAL INFORMATION

Eye contact:	Cement is a severe eye irritant. Mild exposure can cause soreness. Gross exposures or untreated mild exposures can lead to chemical burning or ulceration of the eye.
Skin:	Cement powder or cement/water mixtures can cause irritant contact dermatitis, allergic (chromium) dermatitis and/or burns.
Ingestion:	Swallowing of small amounts of adhesive mix is unlikely to cause any significant reaction. Larger amounts may result in irritation to the gastro-intestinal tract.
Inhalation:	The powder can cause inflammation of mucous membranes
Chronic effects:	Prolonged and repeated exposures, in excess of the WEL may cause rhinitis and coughing and permanent damage to the lungs (silicosis). This is a reportable disease in the U.K Skin contact may cause allergic (chromium) dermatitis, usually through contact with the wet mix.

12. ECOLOGICAL INFORMATION

The addition of this product to water will give an alkaline solution, which may be toxic to aquatic life. Do not allow into watercourses/drains.

13. DISPOSAL CONSIDERATIONS

Should be disposed of at a suitable landfill site, in accordance with local regulations.

14. TRANSPORT INFORMATION

This product is not classed as hazardous for the purposes of transportation.

15. REGULATORY INFORMATION

Symbol:	Xi, Irritant
Contains:	Portland Cement, C.A.S. No. 65997-15-1. Contains chromium (VI). May produce an allergic reaction.

R Phrases:

R36/38:	Irritating to the skin and eyes.
R41:	Risk of serious damage to eyes

S Phrases:

S2:	Keep out of the reach of children**.**
S26:	In case of contact with eyes, rinse immediately with plenty of water and seek medical help.
S28:	After contact with skin, wash immediately with plenty of soap and water
S36/37/39	Wear suitable protective clothing, gloves and eye / face protection

16. OTHER INFORMATION

The product should be used as directed - consult specification sheet for further details. This information is given in good faith and is believed to be accurate and complete. It should be made available to all personnel using/ handling the product.

This safety sheet has been prepared in accordance with the provisions of the EC SDS Directive 91/155.