Addendum Report

Prepared for RPS Planning & Development

In connection with Structural Survey of 11 Nr Reema Flat Blocks in Milton Keynes

7551/R001 V000/31-10-13/JMF

Contents

CONTENTS i
REVISION HISTORY ii
QUALITY ASSURANCE iii

1. INTRODUCTION 1
2. SURVEY METHODOLOGY 1
3. RESULTS OF SURVEY 2
4. RECOMMENDATIONS 5

APPENDICES

Appendix A Address List
Appendix B Construction Details
Appendix C Sampling Methodology
Appendix D Tables of Results
Appendix E Laboratory Test Certificates
Appendix F Photographic Logs
Appendix G Defects Location Logs

Revision History

Revision	Amendments	Issued to	Date of Issue
00		Colin Ayre Senior Structural Engineer	31 October 2013

Quality Assurance

This report describes work commissioned by RPS Planning & Development on behalf of Milton Keynes Services Partnerships LLP under their email instruction dated 12 August 2013. The Client's representative for the work was Mr Colin Ayre. The survey was carried out by Michael Dyson Associates Limited over the period 19 August to 27 September 2013.

The report was:

Prepared by: .....

Michael Fletcher,
Associate

Approved by: .....

Alistair Dyson,
Managing Director

Date: 31 October 2013

© Michael Dyson Associates Ltd

The copyright of this report and any supplementary information issued to the client shall remain vested in Michael Dyson Associates Limited. It shall not be reproduced or passed to any other party without the express written consent of an authorised director of Michael Dyson Associates Limited.

1. Introduction

Michael Dyson Associates Limited was appointed in June 2013 by RPS Planning & Development on behalf of Milton Keynes Services Partnership LLP to undertake a Structural Appraisal of 4 Nr from a total of 15 Nr similar 4-storey Reema Flats Blocks at Bletchley, Milton Keynes.

The Reema flats properties, which were constructed during the 1950s, are of Prefabricated Reinforced Concrete (PRC) properties and are designated defective types within the meaning of the 1984 Housing Defects Act, consolidated into the 1985 Housing Act.

The defect is defined as the potential for corrosion of embedded steel reinforcement due to insufficient concrete cover. Precast concrete components were often manufactured with reinforcement cover depths that would be deemed inadequate by today's standards, making them prone to deterioration due to the effects of carbonation.

Carbonation is the process by which concrete reacts with the atmosphere, reducing the alkaline barrier around the embedded reinforcement. Over time this leads to corrosion of the steel, resulting in a loss of structural integrity. Furthermore, concrete components produced around this time are also susceptible to chloride-induced attack. Calcium chloride was added to the concrete mix to accelerate the setting reaction but has subsequently been discovered to contribute to the corrosion process.

On completion of this initial structural investigation a summary report was issued (our reference 7551 R001 v00/12-07-13) and a recommendation was made to extend the investigation to the remaining 11 Nr Reema blocks of flats.

Michael Dyson Associates Limited was subsequently instructed by RPS Planning & Development on behalf of Milton Keynes Services Partnership LLP to undertake the recommended additional surveys and the present addendum report is a summary of the findings of the this further investigation.

This report includes a summary of the results of the visual inspection of external elevations and intrusive tests. All laboratory results are certified by the testing station, Nicholls Colton Testing Limited, who are UKAS accredited.

2. Survey Methodology

As before, the further survey included for a visual inspection of the external elevations and the internal communal areas to identify existing defects and an invasive survey which included for testing of the concrete components. Dust samples were analysed at a laboratory to determine cement content and the presence of Chloride Ion. Additional on site tests were carried out to determine the extent of carbonation penetration and depth of concrete cover to embedded steel reinforcement.

The properties are assessed in relation to the engineering requirements of the Non Traditional Homes Appraisal Scheme ("NTHAS") and the results of the concrete sampling will determine whether the properties will achieve the required standard for long term durability, assessed in terms of an assured life of 30 years and also for mortgageability.

3. Results of Survey

Information relating to the existing construction details and potential structural problems associated with the Reema blocks of flats at Bletchley are included in the initial report and it is assumed that the reader of the present report is familiar with the content and findings of the initial report.

3.1 Stock Distribution

The address list provided at the outset of the survey commission included a total of 15 Nr Milton Keynes Services Partnership LLP managed Reema Flats Blocks located at a various sites within Bletchley, Milton Keynes. The properties are believed to have been built in the period 1946/48.

Previously 4 Nr blocks, (representing 27% of the stock of Reema flats Blocks owned by Milton Keynes Services Partnership LLP at Bletchley) were selected by the Council for inspection and investigation.

The present survey includes the remaining 11 Nr blocks. a total of 8 Nr of the 11 Nr blocks are of the same 4-storey, 12 in-a-block flats of “T-Shaped” plan layout, as the previous 4 Nr blocks , however the other 3 Nr blocks are of 3–storey of “rectangular shaped” plan layout ranging from 6 Nr to 18 Nr flats units in each block.

The 11 Nr Reema Flats Blocks within the present addendum survey include;

- Argyll House, Suffolk Close
- 66-76 Avon House, Avon Grove
- 78-100 Avon House, Avon Grove
- 1-18 Cherwell House, Derwent Drive
- Doune House, Torre Close
- Edinburgh House, Buckingham Road
- Fife House, Cornwall Grove
- Lanark House, Cumbria Close
- Lewes House, Buckingham Road
- Pembroke House, Somerset Close
- Rutland House, Middlesex Drive

3.2 External Visual Survey Findings

The visual inspection of external elevations of the Reema flats blocks identified relatively little deterioration of the external concrete wall panels or of defects to roof finishes.

Generally minor areas of deterioration and defects to external elevations were observed at the flats blocks, including cracking of corner PRC column units and cracking and spalling of the PRC cover panels linking wall panel units at gable ends and localised deterioration of non-structural window reveals, cills and surround units.

Minor damage, including rust spotting and staining to PRC cladding panels was noted at the majority of blocks inspected.

Water staining, cracking and spalling to PRC entrance canopies was also observed at the majority of the blocks inspected.

Such cracking is typically associated with corrosion of the steel reinforcement within the PRC panels due to low concrete cover but may allow water ingress into the structure and could lead to eventual further deterioration of the PRC panels.

Structurally, roofs appear to be in reasonable condition generally with only minor undulations in the roof line observed. Significant moss growth was noted to only 2 Nr roofs of the blocks inspected.

Original timber soffits and fascias are generally in fair condition with no decay observed and minor flaking paint noted.

Ground levels bridging dpc was also noted at the majority of the blocks inspected.

Cracking and deterioration to the unreinforced concrete floor slab edge was noted to the majority of the blocks inspected.

- Refer to Appendix D.1 for Summary of External Visual Inspections.
- Refer to Appendix G for Defects Locations Elevation drawings.

3.3 Internal Visual Survey Findings

Roof structures at the flat blocks inspected were generally found to be in fair structural condition, with no splits and shakes observed to roof timbers. Sarking felt was noted to also be in fair condition with only minor tears noted.

Moisture contents of roof timbers were recorded at a maximum of 14% which is well below levels at which decay can be expected. No decay or evidence of insect or fungal attack was observed indicating that roofs have largely remained dry and well ventilated. At Lanark House a single purlin was noted to be sagging mid span due to the joint being un-supported and not adequately bolted.

Party wall PRC panels within roofspaces were noted to be in sound, crack free condition and the in-situ joint between panels well formed. However access doors cut into the PRC party walls above communal areas create an inadequate party wall fire stop between flats at the majority of the blocks. These access doors appear to have been formed to provide access into the various roof voids above separate flats and if this access is to be retained the doors should be replaced with appropriate fire doors where missing. If access is no longer required then the openings could be blocked with masonry with a rendered finish to ensure an adequate fire and smoke barrier. Similarly any gaps at built in purling timbers and ridges should also be adequately sealed against the spread of smoke and flame in the event of a fire.

Water staining of precast chimney sections was observed, indicating leaks around flashings, although this appears to be historic as daylight was not viewed at flashings.

Levels of loft insulation was noted to be variable and ranged from no insulation at all at block Nrs 66-76 Avon House to 300mm in thickness at Lewes house, with 150mm to 200mm generally at most of the flats blocks inspected, which is below levels currently recommended by current Building Regulations.

Internally, access to individual flats was not made available at the time of the survey. However access to each floor of the communal areas was inspected and minor cracking of PRC wall panels and panel joints was noted at all of the blocks inspected.

No significant structural cracking or spalling to the staircase units, floors or ceilings was observed, nor was there evidence of heave of ground floors associated with reactive fill materials or ground movements. Such cracking that was observed is minor in nature and is deemed to be associated with thermal expansion and contraction rather than due to corrosion of embedded steel reinforcement within PRC wall panels

- Refer to Appendix D.2 for Summary of Internal Visual Inspections.

3.4 Concrete Testing Results

Samples of the PRC wall panels and in-situ concrete columns and ring beams were taken for laboratory analysis. In order to assess the chloride content of concrete, it is first necessary to establish the likely cement content.

The cement content was calculated by amalgamating all the samples of the PRC panels and all the samples of the in-situ column and ringbeam components at the properties. A cement content of 20% by weight of concrete was used to calculate the chloride content of the sample, which is typical of densely formed and well compacted reinforced concrete used in the construction of Reema Hollow Panel properties generally in our experience.

- Refer to Appendix D.3 for Summary of Cement Content Analysis.

Dust samples were taken from a total of 220 Nr components across the 11 Nr Flats Blocks of flats, including accessible PRC wall panels, in-situ columns and ring beams. Samples were analysed at a UKAS accredited laboratory and the percentage chloride ion by weight of cement derived for each sample.

The majority of samples tested returned low levels of chloride (below 0.4 % by weight of cement as defined by BRE). However 75 Nr samples of columns, panels and ring beams returned levels of chloride above 0.6% by weight of cement (corrosion is at a higher risk at these levels as defined by the engineering requirements of NTHAS) and of these 12 Nr samples returned high levels of chloride (at above 1.0% by weight of cement) as defined by BRE.

It is therefore considered likely that chloride ion was added somewhat randomly to the precast concrete components used in the construction of these Reema Flats. There is therefore likely to be a significant risk of corrosion of steel reinforcement in the long-term by chloride ion contamination of the concrete used in the construction of these flats blocks.

- Refer to Appendix D.5 for summary of chloride content analysis.
- Refer to Appendix E for Laboratory Test Certificates.

Measurements of carbonation penetration of PRC panel units were noted to be generally low, with incidences of more complete carbonation and to beyond the depth of steel reinforcement detected at only 3 Nr panels across the 11 Nr of the flats blocks inspected. Carbonation of the in-situ concrete column and ringbeam components was also noted to be generally low at 1mm with higher levels of penetration only noted at a single insitu cast column.

- Refer to Appendix D.6 for summary of depth of cover and carbonation analysis.

Steel reinforcement, where exposed during sampling of the concrete at the flats blocks, was generally noted to be free of significant corrosion with no surface scale or loss of section observed typically. Steel reinforcement exposed in a PRC panel at each of Edinburgh and Lewes house was noted to be severely corroded leading to cracking and spalling and significant loss of cross section steel was observed..

Generally however, reinforcement in external wall panels is considered to be at only low risk of corrosion at present due to the effects of carbonation if wetted, although carbonation may be more variable in areas not sampled. Panels can therefore be expected to continue to suffer deterioration at an accelerated rate due to the effects of carbonation if not protected from the elements in the long term.

Steel reinforcement within the in-situ concrete column and ringbeam components will also gradually lose the protection of the naturally alkaline concrete and therefore the effectiveness of the proposed external overcladding and low levels of internal humidity will need to be maintained to ensure that steel remains in a warm and dry environment in the long term.

Investigation of the in-situ concrete columns between the PRC wall panels during concrete sampling at the flats confirmed that the in-situ concrete, where inspected at least, is well compacted. No areas of loose or voided concrete were observed in column elements during the present structural assessment, although areas of voided concrete elsewhere cannot be discounted.

4. Recommendations

The findings of the extended survey of the remaining 11 N blocks of Reema flats at Bletchley are consistent with those of the initial 4 Nr blocks previously surveyed.

The recommendations for structural repairs and the long term protection of the concrete and improvements to the thermal performance of the these blocks are similarly consistent with the recommendations made within the initial report

- Refer to Report Ref 7551 R001 v00/12-07-13 for Recommendations for Repairs and Improvement.

Appendices

Appendix A

Address List

A.1 Address List of Surveyed Reema Flats Blocks

Appendix B

Construction Details

Figure B.1 Reema Hollow Panel Isometric Drawing

Appendix C

Sampling Methodology

C.1 Sampling Methodology and Concrete Deterioration

Appendix D

Tables of Results

D.1 Summary of External Visual Inspections

D.2 Summary of Internal Visual Inspections

D.3 Summary of Cement Content Analysis

D.4 Chloride Content Analysis

D.5 Summary of Chloride Content Analysis

D.6 Summary of Depth of Cover and Carbonation Results

Appendix E

Laboratory Test Certificates

E.1 Nicholls Colton Test Certificates Chloride Ion Content

E.1.1 Ref: 14746/MDA/001

E.1.2 Ref: 14786/MDA/001

E.2 Nicholls Colton Test Certificates Cement Content

E.2.1 Ref: 14746/MDA/002

E.2.2 Ref: 14786/MDA/002

Appendix F

Photo Logs

F.1 Elevations of Surveyed Flats Blocks

F.2 General Observations

Appendix G

Defects Location Logs

G.1 External Defects Log

G.2 Locations of External Defects – Argyll House

G.3 Locations of External Defects – 66-76 Avon House

G.4 Locations of External Defects – 78-100 Avon House

G.5 Locations of External Defects – Cherwell House

G.6 Locations of External Defects – Doune House

G.7 Locations of External Defects – Edinburgh House

G.8 Locations of External Defects – Fife House

G.9 Locations of External Defects – Lanark House

G.10 Locations of External Defects – Lewes House

G.11 Locations of External Defects – Pembroke House

G.12 Locations of External Defects – Rutland House

G.13 Internal Defects Log

G.14 Locations of Internal Defects – Argyll House

G.15 Locations of Internal Defects – 66-77 Avon House

G.16 Locations of Internal Defects – 78-100 Avon House

G.17 Locations of Internal Defects – Cherwell House

G.18 Locations of Internal Defects – Doune House

G.19 Locations of Internal Defects – Edinburgh House

G.20 Locations of Internal Defects – Fife House

G.21 Locations of Internal Defects – Lanark House

G.22 Locations of Internal Defects – Lewes House

G.23 Locations of Internal Defects – Pembroke House

G.24 Locations of Internal Defects – Rutland House

RPS Planning & Development							
Address List & Catalogue							
Surveyed Reema Flats Blocks							
MDA Ref:	Flat Nr	Block	Street	Post Code	Milton Keynes Borough Council Owned (MK) Leasholder (L)	Ground Floor Flat (GF) First Floor Flat (FF) Second Floor Flat (SF) Third Floor Flat (TF)	Block Variant Nr
Bletchley							
1.1	1	Argyll House	Suffolk Close	MK3 7EW	MK		4
	3	Argyll House	Suffolk Close	MK3 7EW	L		
	5	Argyll House	Suffolk Close	MK3 7EW	L		
	7	Argyll House	Suffolk Close	MK3 7EW	MK		
	9	Argyll House	Suffolk Close	MK3 7EW	MK		
	11	Argyll House	Suffolk Close	MK3 7EW	MK		
	13	Argyll House	Suffolk Close	MK3 7EW	MK		
	15	Argyll House	Suffolk Close	MK3 7EW	MK		
	17	Argyll House	Suffolk Close	MK3 7EW	MK		
	19	Argyll House	Suffolk Close	MK3 7EW	MK		
	21	Argyll House	Suffolk Close	MK3 7EW	MK		
	23	Argyll House	Suffolk Close	MK3 7EW	MK		
1.2	66	Avon House	Avon Grove	MK3 7BS	MK		2
	68	Avon House	Avon Grove	MK3 7BS	MK		
	70	Avon House	Avon Grove	MK3 7BS	MK		
	72	Avon House	Avon Grove	MK3 7BS	MK		
	74	Avon House	Avon Grove	MK3 7BS	MK		
	76	Avon House	Avon Grove	MK3 7BS	MK		
1.3	78	Avon House	Avon Grove	MK3 7BS	MK		1
	80	Avon House	Avon Grove	MK3 7BS	MK		
	82	Avon House	Avon Grove	MK3 7BS	L		
	84	Avon House	Avon Grove	MK3 7BS	MK		
	86	Avon House	Avon Grove	MK3 7BS	L		
	88	Avon House	Avon Grove	MK3 7BS	L		
	90	Avon House	Avon Grove	MK3 7BS	MK		
	92	Avon House	Avon Grove	MK3 7BS	MK		
	94	Avon House	Avon Grove	MK3 7BS	MK		
	96	Avon House	Avon Grove	MK3 7BS	MK		
	98	Avon House	Avon Grove	MK3 7BS	MK		
	100	Avon House	Avon Grove	MK3 7BS	L		
1.4	1	Cherwell House	Derwent Drive	MK3 7BJ	MK		3
	2	Cherwell House	Derwent Drive	MK3 7BJ	MK		
	3	Cherwell House	Derwent Drive	MK3 7BJ	MK		
	4	Cherwell House	Derwent Drive	MK3 7BJ	MK		
	5	Cherwell House	Derwent Drive	MK3 7BJ	MK		
	6	Cherwell House	Derwent Drive	MK3 7BJ	MK		
	7	Cherwell House	Derwent Drive	MK3 7BJ	MK		
	8	Cherwell House	Derwent Drive	MK3 7BJ	MK		
	9	Cherwell House	Derwent Drive	MK3 7BJ	MK		
	10	Cherwell House	Derwent Drive	MK3 7BJ	MK		
	11	Cherwell House	Derwent Drive	MK3 7BJ	MK		
	12	Cherwell House	Derwent Drive	MK3 7BJ	MK		
	13	Cherwell House	Derwent Drive	MK3 7BJ	L		
	14	Cherwell House	Derwent Drive	MK3 7BJ	MK		
	15	Cherwell House	Derwent Drive	MK3 7BJ	MK		
	16	Cherwell House	Derwent Drive	MK3 7BJ	MK		
	17	Cherwell House	Derwent Drive	MK3 7BJ	MK		
	18	Cherwell House	Derwent Drive	MK3 7BJ	MK		

Table A.1

© Michael Dyson Associates Ltd.

RPS Planning & Development							
Address List & Catalogue							
Surveyed Reema Flats Blocks							
MDA Ref:	Flat Nr	Block	Street	Post Code	Milton Keynes Borough Council Owned (MK) Leasholder (L)	Ground Floor Flat (GF) First Floor Flat (FF) Second Floor Flat (SF) Third Floor Flat (TF)	Block Variant Nr
Bletchley							
1.5	1	Doune House	Torre Close	MK3 6NQ	MK	[redacted]	5
	2	Doune House	Torre Close	MK3 6NQ	MK		
	3	Doune House	Torre Close	MK3 6NQ	MK		
	4	Doune House	Torre Close	MK3 6NQ	MK		
	5	Doune House	Torre Close	MK3 6NQ	MK		
	6	Doune House	Torre Close	MK3 6NQ	MK		
	7	Doune House	Torre Close	MK3 6NQ	MK		
	8	Doune House	Torre Close	MK3 6NQ	L		
	9	Doune House	Torre Close	MK3 6NQ	MK		
	10	Doune House	Torre Close	MK3 6NQ	L		
	11	Doune House	Torre Close	MK3 6NQ	MK		
	12	Doune House	Torre Close	MK3 6NQ	MK		
1.6	1	Edinburgh House	Buckingham Road	MK3 5JQ	MK		4
	2	Edinburgh House	Buckingham Road	MK3 5JQ	MK		
	3	Edinburgh House	Buckingham Road	MK3 5JQ	MK		
	4	Edinburgh House	Buckingham Road	MK3 5JQ	MK		
	5	Edinburgh House	Buckingham Road	MK3 5JQ	MK		
	6	Edinburgh House	Buckingham Road	MK3 5JQ	MK		
	7	Edinburgh House	Buckingham Road	MK3 5JQ	MK		
	8	Edinburgh House	Buckingham Road	MK3 5JQ	MK		
	9	Edinburgh House	Buckingham Road	MK3 5JQ	MK		
	10	Edinburgh House	Buckingham Road	MK3 5JQ	MK		
	11	Edinburgh House	Buckingham Road	MK3 5JQ	MK		
	12	Edinburgh House	Buckingham Road	MK3 5JQ	MK		
1.7	5	Fife House	Cornwall Grove	MK3 7HY	MK		6
	7	Fife House	Cornwall Grove	MK3 7HY	MK		
	9	Fife House	Cornwall Grove	MK3 7HU	L		
	11	Fife House	Cornwall Grove	MK3 7HY	MK		
	13	Fife House	Cornwall Grove	MK3 7HY	MK		
	15	Fife House	Cornwall Grove	MK3 7HY	MK		
	17	Fife House	Cornwall Grove	MK3 7HY	L		
	19	Fife House	Cornwall Grove	MK3 7HY	L		
	21	Fife House	Cornwall Grove	MK3 7HY	MK		
	23	Fife House	Cornwall Grove	MK3 7HY	L		
	25	Fife House	Cornwall Grove	MK3 7HY	L		
	27	Fife House	Cornwall Grove	MK3 7HY	MK		
1.8	1	Lanark House	Cumbria Close	MK3 7EL	MK		6
	2	Lanark House	Cumbria Close	MK3 7EL	MK		
	3	Lanark House	Cumbria Close	MK3 7EL	MK		
	4	Lanark House	Cumbria Close	MK3 7EL	MK		
	5	Lanark House	Cumbria Close	MK3 7EL	MK		
	6	Lanark House	Cumbria Close	MK3 7EL	MK		
	7	Lanark House	Cumbria Close	MK3 7EL	MK		
	8	Lanark House	Cumbria Close	MK3 7EL	L		
	9	Lanark House	Cumbria Close	MK3 7EL	MK		
	10	Lanark House	Cumbria Close	MK3 7EL	MK		
	11	Lanark House	Cumbria Close	MK3 7EL	MK		
	12	Lanark House	Cumbria Close	MK3 7EL	MK		

Table A.1 Continued

© Michael Dyson Associates Ltd.

RPS Planning & Development							
Address List & Catalogue							
Surveyed Reema Flats Blocks							
MDA Ref:	Flat Nr	Block	Street	Post Code	Milton Keynes Borough Council Owned (MK) Leasholder (L)	Ground Floor Flat (GF) First Floor Flat (FF) Second Floor Flat (SF) Third Floor Flat (TF)	Block Variant Nr
Bletchley							
1.9	1	Lewes House	Buckingham Road	MK3 5JH	MK	[redacted]	4
	2	Lewes House	Buckingham Road	MK3 5JH	MK		
	3	Lewes House	Buckingham Road	MK3 5JH	MK		
	4	Lewes House	Buckingham Road	MK3 5JH	MK		
	5	Lewes House	Buckingham Road	MK3 5JH	MK		
	6	Lewes House	Buckingham Road	MK3 5JH	MK		
	7	Lewes House	Buckingham Road	MK3 5JH	MK		
	8	Lewes House	Buckingham Road	MK3 5JH	MK		
	9	Lewes House	Buckingham Road	MK3 5JH	MK		
	10	Lewes House	Buckingham Road	MK3 5JH	MK		
	11	Lewes House	Buckingham Road	MK3 5JH	MK		
	12	Lewes House	Buckingham Road	MK3 5JH	MK		
1.10	17	Pembroke House	Somerset Close	MK3 7HN	L		4
	19	Pembroke House	Somerset Close	MK3 7HP	MK		
	21	Pembroke House	Somerset Close	MK3 7HJ	MK		
	23	Pembroke House	Somerset Close	MK3 7HP	MK		
	25	Pembroke House	Somerset Close	MK3 7HP	MK		
	27	Pembroke House	Somerset Close	MK3 7HP	MK		
	29	Pembroke House	Somerset Close	MK3 7HP	MK		
	31	Pembroke House	Somerset Close	MK3 7HP	MK		
	33	Pembroke House	Somerset Close	MK3 7HP	MK		
	35	Pembroke House	Somerset Close	MK3 7HP	MK		
	37	Pembroke House	Somerset Close	MK3 7HP	MK		
	39	Pembroke House	Somerset Close	MK3 7HP	L		
1.11	81	Rutland House	Middlesex Drive	MK3 7EZ	MK		4
	83	Rutland House	Middlesex Drive	MK3 7EZ	MK		
	85	Rutland House	Middlesex Drive	MK3 7EZ	L		
	87	Rutland House	Middlesex Drive	MK3 7EZ	MK		
	89	Rutland House	Middlesex Drive	MK3 7EZ	MK		
	91	Rutland House	Middlesex Drive	MK3 7EZ	MK		
	93	Rutland House	Middlesex Drive	MK3 7EZ	MK		
	95	Rutland House	Middlesex Drive	MK3 7EZ	MK		
	97	Rutland House	Middlesex Drive	MK3 7EZ	MK		
	99	Rutland House	Middlesex Drive	MK3 7EZ	MK		
	101	Rutland House	Middlesex Drive	MK3 7EZ	MK		
	103	Rutland House	Middlesex Drive	MK3 7EZ	MK		

Table A.1 Continued

© Michael Dyson Associates Ltd.

RPS Planning & Development

Construction Details

Construction Details - Reema Hollow Panel PRC Properties

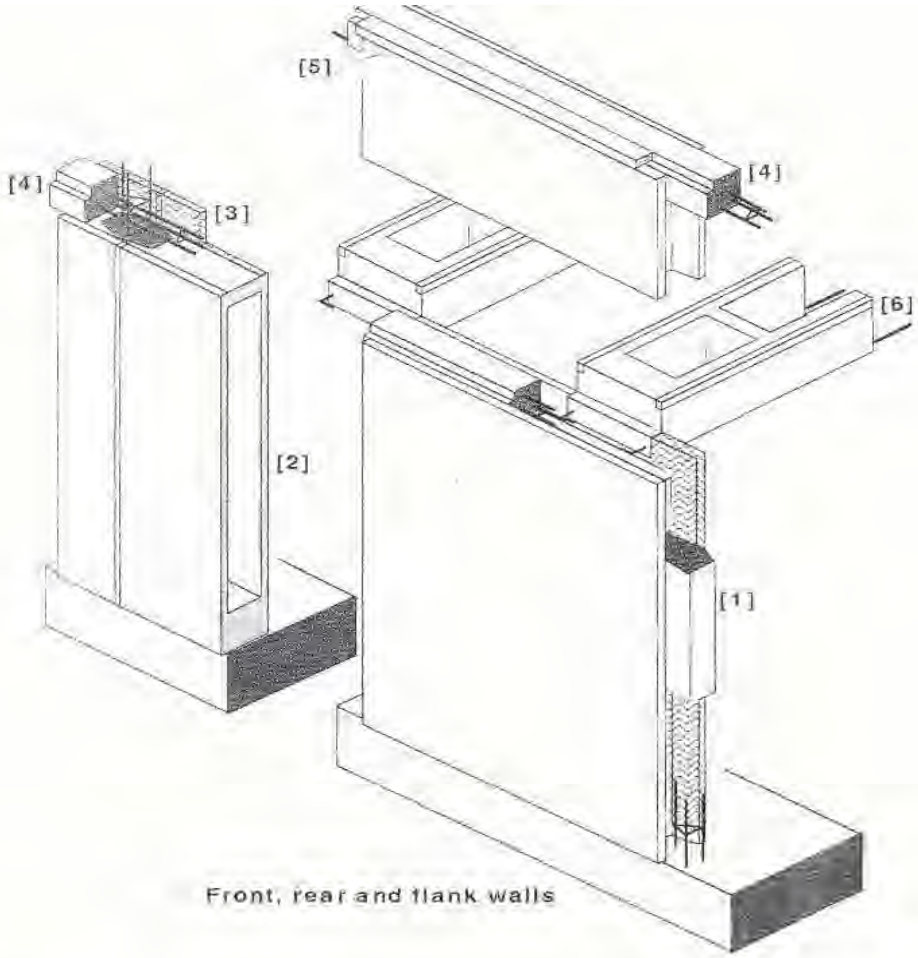

CONSTRUCTION

Substructure: Pad foundations below junction of each panel. Concrete slab.
External walls: RC columns **[1]**, storey height room size dense aggregate hollow PRC panels with internal webs **[2]** with hollow core comprising 1 ½" external leaf, 6 ½" cavity, 1" inner leaf lined with fibreboard **[3]**. RC ring beams **[4]** at first floor and eaves level cast into trough shaped panel heads. Timber wall plate **[5]**.
Separating wall: Dense aggregate hollow PC panels.
Partitions: PC panels. Some non-loadbearing walls of timber stud lined with plasterboard.
Ground floor: Concrete.
First floor: Timber boarding on timber battens in 10 ½" hollow PC beams **[6]**.
Ceilings: Plasterboard.
Roof: Timber rafters and purlins and concrete tiles or asbestos cement sheets.

VARIANTS

External walls of PRC panels cast with integral window sills.
Flank wall recessed relative to the gables instead of joined flush at corners.
Gable wall formed by abutting triangular panels at wall plate level.
First floor of timber joists on joist hangers.

Figure B.1

© Michael Dyson Associates Ltd.

C.1 Non Traditional Concrete (PRC) Properties

It is estimated that approximately 250,000 Prefabricated Reinforced Concrete houses were constructed in the UK.

Prefabricated reinforced concrete (PRC) houses bear the stigma of being, in large part, "unmortgageable". The Housing Defects Legislation, consolidated in the Housing Act 1985, identified a number of PRC house types as being defective and, thus "blighted". As a result the Building Societies Association and other lenders declined to offer mortgages against them.

The underlying reason for the blight is the potential for rusting and expansion of embedded reinforcement which compromises structural integrity by cracking and spalling of the structural concrete members. Alongside this problem construction details can be poorly arranged, workmanship variable and quality of components inconsistent. Foundations to such housing are by today's standards often shallow and thermal properties invariably fall short of modern expectations.

Non-traditional concrete systems can be subdivided into three broad types distinguished by their main features:-

Type 1: Framed, with outer leaves of brick and other masonry or clad with purpose made blocks and panels.

Within this category there are differences in frame characteristics, width of cavities, methods of connecting frame members, bolted or insitu poured joints and methods of tying of cladding blocks.

Type 2: Large Panel.

This category includes systems comprising storey height precast panels assembled on site, with either bolted or insitu poured concrete connections, forming various horizontal ring beams and vertical columns between panels. Panels may be of hollow, double skinned type or external leaf only, with linings of masonry, plasterboard or similar materials.

A variant of the large panel system is the small panel system, which uses smaller half storey or less type panels or blocks of precast concrete units, either rendered or faced with brick slips or similar claddings.

- This category includes the Reema Flats owned by Milton Keynes Services Partnership LLP.

Type 3: Insitu Concrete.

This category includes a wide variety of insitu built concrete types, often incorporating PRC components such as window lintels, door surrounds and canopies and internal load bearing floor beams.

Weather protection to either solid or cavity outer walls is often provided by render coats, or conventional masonry.

Not all concrete houses have the same potential for degradation. Notwithstanding poor workmanship or localised structural and/or foundation issues, the risk level can be determined by testing for depth of cover, depth of carbonation and chloride content to predict the future lifespan of the structures.

Durability of the concrete load bearing elements is the main concern. Provided chloride levels are low and the concrete is protected from the elements with suitable cladding, and any necessary repairs put in hand and there is no increased risk of condensation by inappropriate rehabilitation, there is no reason why concrete (PRC) dwellings should not give acceptable performance into the foreseeable future and on a par with the life assumed for rehabilitated conventionally constructed dwellings.

C.2 Concrete Deterioration

C.2.1 Introduction

The general mechanisms of concrete decay outlined below have been clearly established over the last fifty years, although before that there was the widespread general feeling that whilst good quality concrete and a generous cover was a good thing, the incorporation of calcium chloride was detrimental to any embedded reinforcement.

A systematic approach to mix design to produce concrete of specified strength only became widely adopted in the 1950's, although it was generally acknowledged before then that minimal water, good aggregate grading to ease compaction and a high cement content would produce stronger concrete. Many precast concrete factories had begun to recognise by the 1950's that concretes with higher cement contents more than justified their greater cost by increasing the rate of use of expensive moulds through rapid strength gain which enabled early de-moulding and handling.

Consequently any concrete member produced before 1950 is an uncertain quantity. Although general 'good practice' would produce a durable concrete, the reasons why this was so were not known, making lapses from the ideal more likely.

C.2.2 Cement Content

Determination of cement content is expensive and, unless original samples of the cement and aggregate used are available, the accuracy is generally poor.

When the chloride content of a drilling dust sample is expressed in terms of cement content, unless the individual dust samples are representative of the concrete as a whole then the determination will not be highly accurate.

Provided, however, the results are evaluated on a statistical basis, this lack of representivity for individual samples does not have a significant effect on the overall outcome of surveys.

Cement content is measured by determination of insoluble residue, soluble silica and calcium oxide for calculation of cement content of concrete in accordance with clause 5.5 of BS1881: Part 124: 1988.

C.2.3 Cover and Carbonation

Concrete is a brittle material which becomes ductile and robust when steel reinforcement is included in it. It is not a solid, rather a mass of solid particles - the aggregates - held together by the crystalline and amorphous products of the chemical reaction between cement - usually Ordinary Portland Cement (OPC) - and water, collectively called the hydrated cement paste. OPC paste is porous and the pores are filled with

excess mixing water saturated with lime and other hydration products in equilibrium with the hydrated cement paste.

Concrete therefore bears some resemblance on a microscopic scale to a damp sponge, but with limewater in the pores. Freshly made concrete is therefore alkaline and steel will not corrode in an alkaline environment because a passive layer is formed on the surface inhibiting further oxidation. Steel and concrete have similar coefficients of thermal expansion, and thus reinforced concrete behaves as a coherent, composite material through a wide range of environmental conditions.

The Earth's atmosphere is acidic, largely due to its carbon dioxide content. From the day it is cast, therefore, the alkalinity of concrete is reduced from the surface, a process called *carbonation*.

Carbonation has little effect on the concrete itself other than to induce a minor shrinkage and to slightly increase its strength. Its most important effect is to remove the corrosion protection to embedded steel conferred by the alkaline pore water, as this becomes neutralised. Once carbonation (which causes a steadily thickening surface skin of neutral concrete) has reached the depth of embedment of the steel, a distance known as the *cover*, the steel can corrode if water and oxygen can reach it.

Rate of carbonation depends on the quality of the original cement paste. A porous paste, associated with weak concrete, made using little cement and too much water is rapidly penetrated by carbon dioxide, and when such concrete is carbonated it provides easy access to the embedded steel for air and water. A dense and strong concrete, made with a well graded aggregate, sufficient cement and little water, and well compacted, has a cement paste that is only slowly carbonated, and when it is, the carbonated paste can still act as a physical barrier, limiting ingress of air and water to the steel.

When steel corrodes, the rust produced occupies many times the volume of parent metal. When this occurs within carbonated concrete, the pressure generated by the growing rust layer cracks and spalls the overlying concrete, leading to direct entry of air and water and ever more rapid corrosion of the steel.

At this point reinforced concrete appears very distressed, although it is still a long way from losing all its strength and ductility.

It should be noted that the process of carbonation followed by reinforcement corrosion produces no visible effect on OPC concrete until corrosion starts. Once cracking has been induced, corrosion damage is rapid and progressive. Thus it is wrong to consider that a small crack in a 40-year old component has taken 40 years to develop and should therefore take many decades to grow into a large crack.

In such a concrete, the corrosion process that produced the small crack may have taken as little as two years since carbonation reached the steel, and another two years of exposure will lead to considerably more visible damage.

Reinforced concrete that is exposed to atmospheric influences will inevitably lose its alkalinity due to this process. Rate of conversion depends on depth of cover, the diffusion rate of carbon dioxide through any protective coatings, porosity and width of cracks of the concrete and the relative humidity

of the atmosphere. Carbonation in an internal environment is more rapid, but is generally of less consequence because an internal domestic environment is rarely wet enough to induce reinforcement corrosion, except in kitchens and bathrooms, where ventilation is less than adequate.

On the exterior of a building, where cover and concrete quality are low, corrosion damage can often be seen within ten years. If cover is normal and concrete quality high the expected serviceable life of reinforced concrete can probably be measured in centuries.

Carbonation depths were determined by spraying the surface of a freshly fractured concrete face with phenolphthalein indicator, which turns un-carbonated cement pastes bright purple. The depth of carbonation, represented by a colourless zone, was measured and recorded.

The cover to the embedded reinforcement was measured directly at each component selected for carbonation penetration testing. The presence, condition and depth of concrete cover to reinforcement were noted in relation to the depth of carbonation penetration.

The presence of steel reinforcement within concrete not tested for carbonation penetration was determined by means of an electronically operated, hand held cover meter. Readings of depth of cover can however be affected by the presence of iron pyrites based aggregates or by foil backed dry lining boards where measurements are taken internally.

C.2.4 Chloride Ion Content

A further and important complicating factor can be presence of chlorides in concrete. In the past calcium chloride was often added to the mix to accelerate the setting reaction. This was seen at the time as advantageous because a faster set allowed a quicker turn-round of moulds in a precast concrete factory and also the rapid evolution of heat could protect fresh concrete from frost damage.

The usage of calcium chloride peaked in the 1950's and early 1960's, after which it was realised that it could induce corrosion of reinforcement by disrupting the passive layer on the steel, before the alkalinity of the cover was lost due to carbonation.

Although the use of calcium chloride is now banned, chloride is still a problem as it is a small and mobile ion that can easily penetrate concrete and marine structures and those subject to de-icing salt can suffer from its actions. There remains a legacy of chloride-contaminated concrete in the nation's building stock.

During the time when use of calcium chloride as an accelerator was considered acceptable, the recommended dosage was about 1% chloride ion per unit weight of cement. Later research by Building Research Establishment (BRE) defined three categories of risk of corrosion in relation to chloride content. Less than 0.4% is regarded as *low* risk, 0.4% - 1.0% is considered *medium* risk and over 1% is held to give a *high* risk of reinforcement corrosion. Although there is as yet no scientific proof, it is now believed that the higher the cement content, the lower is the risk of reinforcement corrosion at a given chloride content. The BRE figures can therefore be thought of as applicable to low and medium strength concrete but pessimistic for high strength concrete.

However, research has also shown why chloride in medium quality concrete is more hazardous then was earlier believed. Its presence, as well as increasing corrosion rate generally, prolongs corrosion during the drying phase of the alternate wetting and drying cycles so typical of weather exposure in Britain.

The overall variability in cement contents for structural concrete is small compared to the percentage differences in threshold values of chloride contamination. Where chloride contents are large or small, their assessment is not much influenced by assumptions about cement content. However, where chloride contents are borderline cement content determinations may be attributed greater significance.

Chloride content is measured by Potentiometric Titration in accordance with BS 1881:Part124:1988, utilising a powdered concrete sample obtained by drilling a hole in the structural member and collecting the dust produced.

Concrete dust samples were taken from a representative sample of the primary structural components and were sent to UKAS accredited laboratory, Nicholls Colton Testing, Leicester, for analysis.

RPS Planning & Development

Tables of Results

Summary of External Visual Inspection

4 Storey Reema Flats Blocks

MDA Ref	Address	Moss Growth to Roof Covering	Blocked Gutters	Damage to Facsias & Soffits	Patch Repair to PRC Panel	Cracking to PRC Panel	Spalling to PRC Panel	Damaged PRC Panels	Rust Spots to PRC Panel	Staining to PRC Panels	Mortar/Mastic Missing from Panel Joints	Cracking to PRC Window Reveal	Spalling to PRC Window Reveal	Cracking to PRC Door Reveal	Spalling to PRC Door Reveal	Cracking to PRC Door Canopy	Spalling to PRC Door Canopy	Cracking to Concrete Slab Edge	Spalling to Concrete Slab Edge	Foliage Growth	Bridging of Damp Proof Course (DPC)
Bletchley																					
1.1	Argyll House	x	✓	✓	x	✓	✓	x	✓	✓	x	✓	✓	✓	✓	x	x	✓	x	x	✓
1.2	66-76 Avon House	x	x	x	x	✓	x	✓	✓	✓	x	✓	✓	✓	✓	x	✓	✓	x	x	✓
1.3	78-100 Avon House	x	x	x	x	✓	✓	✓	x	✓	x	✓	✓	x	✓	x	✓	✓	x	x	x
1.4	Cherwell House	✓	x	x	x	✓	✓	✓	x	✓	x	✓	✓	x	x	✓	✓	x	✓	x	✓
1.5	Doune House	x	x	x	x	x	✓	✓	x	✓	x	✓	x	✓	✓	✓	✓	✓	x	x	x
1.6	Edinburgh House	x	✓	x	x	✓	✓	✓	✓	✓	x	✓	✓	x	x	✓	✓	x	x	x	✓
1.7	Fife House	x	x	✓	x	✓	x	✓	✓	✓	✓	✓	✓	✓	x	x	x	✓	x	✓	✓
1.8	Lanark House	x	x	x	x	✓	✓	✓	✓	✓	x	✓	x	x	x	✓	✓	x	✓	✓	x
1.9	Lewes House	x	x	x	x	✓	✓	✓	✓	✓	✓	✓	✓	x	x	✓	✓	✓	x	x	✓
1.10	Pembroke House	✓	x	x	x	✓	x	x	✓	✓	x	✓	x	x	x	x	✓	✓	✓	x	x
1.11	Rutland House	x	✓	x	x	x	x	✓	✓	✓	✓	✓	x	x	x	x	x	✓	✓	x	✓
Summary		**2**	**3**	**2**	**0**	**9**	**7**	**9**	**8**	**11**	**3**	**11**	**7**	**4**	**4**	**5**	**8**	**8**	**4**	**2**	**7**

Table D.1

© Michael Dyson Associates Ltd.

RPS Planning & Development

Tables of Results

Summary of Internal Visual Inspections

4 Storey Reema Flats Blocks

MDA Ref	Address	Roofspace											Floors, Walls, Ceiling (Communal Staircase)															
		Access Via Communal Staircase	No Defects Observed within Roofspace	Spilts and Shakes Observed to Timbers	Rotten Timber Observed	Fungal / Insect Attack	Tears to Sarking Felt	Sarking Felt Perished	Leaks to Flashings/Other Areas	Insulation Thickness (mm)	Max. Timber Moisture Content (%)	Inadequate Party Wall Firestop	No Defects Observed to Commmunal Areas	Cracking to PRC Panel	Spalling to PRC Panel	Damage to PRC Panel	Rust Spots on PRC Panels	Cracking to Panel Joints	Missing Mortar to Panel Joints	Cracking to Window Surround	Spalling to Window Surround	Cracking to Door Surrond	Cracking to Lintles Above Door Openings	Cracking to PRC Staircase	Cracking to Ceiling	Cracking/Heave to Ground Floor Slab	Cracking/Heave to Upper Floors Slab	Condensation/Mould Evident	Penetrating Damp Observed
Bletchley																												
1.1	Argyll House	✓	x	x	x	x	x	x	x	150	12	✓	x	✓	x	x	x	✓	x	✓	x	x	x	x	✓	x	x	x	x
1.2	66-76 Avon House	✓	x	x	x	x	✓	x	x	0	12	✓	x	x	x	✓	x	✓	x	x	x	x	x	x	x	x	x	x	x
1.3	78-100 Avon House	✓	x	x	x	x	x	x	x	150	14	✓	x	x	x	x	x	✓	✓	x	x	x	x	x	✓	x	x	x	x
1.4	Cherwell House	✓	x	x	x	x	x	x	x	150	14	✓	x	x	x	x	x	✓	x	x	x	x	x	x	x	x	x	x	x
1.5	Doune House	✓	x	x	x	x	✓	x	x	150	14	✓	x	x	x	✓	x	✓	x	✓	x	✓	✓	x	x	x	x	x	x
1.6	Edinburgh House	✓	x	x	x	x	✓	x	x	150	14	✓	x	✓	x	x	✓	✓	x	x	x	x	✓	x	x	x	x	x	x
1.7	Fife House	✓	x	x	x	x	✓	x	x	150	14	✓	x	✓	x	x	x	✓	✓	✓	x	x	x	x	x	x	x	x	x
1.8	Lanark House	✓	x	✓	x	x	✓	x	x	100	12	✓	x	✓	x	x	x	✓	x	✓	x	x	x	x	✓	x	x	x	x
1.9	Lewes House	✓	x	x	x	x	x	x	x	300	14	✓	x	✓	x	✓	x	✓	✓	✓	x	x	x	x	✓	x	x	x	x
1.10	Pembroke House	✓	x	x	x	x	x	x	x	150	12	✓	x	x	x	✓	x	✓	x	✓	x	x	x	x	✓	x	x	x	x
1.11	Rutland House	✓	x	x	x	x	✓	x	x	200	12	✓	x	x	x	x	x	✓	x	✓	x	x	x	x	✓	x	x	x	x
Summary		**11**	**0**	**1**	**0**	**0**	**6**	**0**	**0**	**150**	**14**	**11**	**0**	**5**	**0**	**4**	**1**	**11**	**3**	**7**	**0**	**1**	**2**	**0**	**6**	**0**	**0**	**0**	**0**

Table D.2

RPS Planning & Development			
Tables of Results			
Summary of Reema Flats Cement Content Analysis - Nicholls Colton Test Results			
Component Type	**Cement Conent Using Soluble Silica %**	**Cement Content Using Calcium Oxide %**	**Preferred Cement Content %**
Amalgamation of all PRC Panels (Avon and Cherwell House)	20.4	48.2	20.5
Amalgamation of all In-situ Columns and Ringbeams (Avon and Cherwell House)	23.6	41.2	23.6
Amalgamation of all PRC Panels (Doune House)	19.3	25.6	19.3
Amalgamation of all In-situ Columns and Ringbeams (Doune House)	21.5	35.1	21.5
Amalgamation of all PRC Panels (Argyll, Lanark, Fife, Penbroke and Rutland House)	22.1	14.0	14.0
Amalgamation of all In-situ Columns and Ringbeams (Argyll, Lanark, Fife, Penbroke and Rutland House)	22.7	23.3	23.0
Amalgamation of all PRC Panels (Edinburgh and Lewes House)	29.7	31.9	29.7
Amalgamation of all In-situ Columns and Ringbeams (Edinburgh and Lewes House)	29.8	37.1	29.8
Mean	**23.6**	**32.1**	**22.7**

Table D.3

© Michael Dyson Associates Ltd

RPS Planning & Development						
Tables of Results						
REEMA FLATS - CHLORIDE CONTENT ANALYSIS				Nicholls Colton Report Nr. 14746/MDA/001		
Address	Argyll House			**Area**	Bletchley	
MDA Ref Nr	**Component**	**Location**	**% Chloride Content by Weight of Concrete**	**% Cement Content**	**% Chloride Content by Weight of Cement**	**BRE Classification (Risk of Corrosion)**
01	Column	GF RH G 2	0.104	20	0.52	Moderate
02	Column	GF R 2	0.006	20	0.03	Low
03	Column	GF RH G 6	0.007	20	0.04	Low
04	Column	GF LH G 7	0.008	20	0.04	Low
05	Ringbeam	GF RH G 2	0.164	20	0.82	Moderate
06	Ringbeam	GF R 2	0.183	20	0.92	Moderate
07	Ringbeam	GF LH G 2	0.148	20	0.74	Moderate
08	Ringbeam	GF LH G 1	0.105	20	0.53	Moderate
09	Panel	GF RH G 2	0.168	20	0.84	Moderate
10	Panel	GF RH G 1	0.015	20	0.08	Low
11	Panel	GF R 2	0.158	20	0.79	Moderate
12	Panel	GF RH G 4	0.141	20	0.71	Moderate
13	Panel	GF RH G 3	0.102	20	0.51	Moderate
14	Panel	GF RH G 5	0.104	20	0.52	Moderate
15	Panel	GF RH G 4	0.101	20	0.51	Moderate
16	Panel	GF RH G 3	0.077	20	0.39	Low
17	Dividing Panel	GF RH G 1	0.067	20	0.34	Low
18	Dividing Panel	GF R 1	0.084	20	0.42	Low
19	Dividing Panel	FF R 2	0.167	20	0.84	Moderate
20	Dividing Panel	GF LH G 1	0.123	20	0.62	Moderate
					External NTHAS Category	**4**

Table D.4.1

© Michael Dyson Associates Ltd.

RPS Planning & Development						
Tables of Results						
REEMA FLATS - CHLORIDE CONTENT ANALYSIS				Nicholls Colton Report Nr. 14746/MDA/001		
Address	66-76 Avon House			**Area**	Bletchley	
MDA Ref Nr	**Component**	**Location**	**% Chloride Content by Weight of Concrete**	**% Cement Content**	**% Chloride Content by Weight of Cement**	**BRE Classification (Risk of Corrosion)**
01	Column	GF F 2	0.011	20	0.06	Low
02	Column	GF F 6	0.027	20	0.14	Low
03	Column	GF RH G 2	0.013	20	0.07	Low
04	Column	GF LH G 3	0.004	20	0.02	Low
05	Ringbeam	GF F 2	0.127	20	0.64	Moderate
06	Ringbeam	GF F 1	0.067	20	0.34	Low
07	Ringbeam	GF F 4	0.118	20	0.59	Moderate
08	Ringbeam	GF F 5	0.119	20	0.60	Moderate
09	Panel	GF F 1	0.078	20	0.39	Low
10	Panel	GF F 2	0.144	20	0.72	Moderate
11	Panel	GF F 4	0.098	20	0.49	Moderate
12	Panel	GF F 5	0.112	20	0.56	Moderate
13	Panel	GF RH G 1	0.105	20	0.53	Moderate
14	Panel	GF RH G 2	0.085	20	0.43	Low
15	Panel	GF LH G 2	0.056	20	0.28	Low
16	Panel	GF LH G 1	0.095	20	0.48	Moderate
17	Dividing Panel	GF RH G 1	0.028	20	0.14	Low
18	Dividing Panel	FF RH G 1	0.062	20	0.31	Low
19	Dividing Panel	GF LH G 1	0.108	20	0.54	Moderate
20	Dividing Panel	FF LH G 1	0.018	20	0.09	Low
					External NTHAS Category	**3**

Table D.4.2

© Michael Dyson Associates Ltd.

RPS Planning & Development						
Tables of Results						
REEMA FLATS - CHLORIDE CONTENT ANALYSIS				Nicholls Colton Report Nr. 14746/MDA/001		
Address	78-100 Avon House			**Area**	Bletchley	
MDA Ref Nr	**Component**	**Location**	**% Chloride Content by Weight of Concrete**	**% Cement Content**	**% Chloride Content by Weight of Cement**	**BRE Classification (Risk of Corrosion)**
01	Column	GF LH G 3	0.007	20	0.04	Low
02	Column	GF F 2	0.007	20	0.04	Low
03	Column	GF F 5	0.006	20	0.03	Low
04	Column	GF RH G 2	0.011	20	0.06	Low
05	Ringbeam	GF LH G 2	0.085	20	0.43	Low
06	Ringbeam	GF LH G 1	0.098	20	0.49	Moderate
07	Ringbeam	GF F 4	0.105	20	0.53	Moderate
08	Ringbeam	GF RH G 2	0.067	20	0.34	Low
09	Panel	GF LH G 1	0.085	20	0.43	Low
10	Panel	GF LH G 2	0.063	20	0.32	Low
11	Panel	GF F 1	0.118	20	0.59	Moderate
12	Panel	GF F 2	0.123	20	0.62	Moderate
13	Panel	GF F 3	0.111	20	0.56	Moderate
14	Panel	GF F 4	0.104	20	0.52	Moderate
15	Panel	GF RH G 1	0.102	20	0.51	Moderate
16	Panel	GF RH G 2	0.099	20	0.50	Moderate
17	Dividing Panel	GF LH G 1	0.017	20	0.09	Low
18	Dividing Panel	FF LH G 1	0.006	20	0.03	Low
19	Dividing Panel	GF RH G 1	0.183	20	0.92	Moderate
20	Dividing Panel	GF RH G 1	0.034	20	0.17	Low
					External NTHAS Category	**3**

Table D.4.3

© Michael Dyson Associates Ltd.

RPS Planning & Development						
Tables of Results						
REEMA FLATS - CHLORIDE CONTENT ANALYSIS				Nicholls Colton Report Nr. 14746/MDA/001		
Address	Cherwell House			**Area**	Bletchley	
MDA Ref Nr	**Component**	**Location**	**% Chloride Content by Weight of Concrete**	**% Cement Content**	**% Chloride Content by Weight of Cement**	**BRE Classification (Risk of Corrosion)**
01	Column	GF F 5	0.007	20	0.04	Low
02	Column	GF F 11	0.011	20	0.06	Low
03	Column	GF F 14	0.020	20	0.10	Low
04	Column	GF F 17	0.006	20	0.03	Low
05	Ringbeam	GF F 3	0.015	20	0.08	Low
06	Ringbeam	GF F 4	0.178	20	0.89	Moderate
07	Ringbeam	GF F 7	0.046	20	0.23	Low
08	Ringbeam	GF F 8	0.056	20	0.28	Low
09	Panel	GF F 3	0.034	20	0.17	Low
10	Panel	GF F 4	0.078	20	0.39	Low
11	Panel	GF F 7	0.028	20	0.14	Low
12	Panel	GF F 8	0.032	20	0.16	Low
13	Panel	GF F 9	0.108	20	0.54	Moderate
14	Panel	GF F 10	0.034	20	0.17	Low
15	Panel	GF F 11	0.006	20	0.03	Low
16	Panel	GF F 12	0.032	20	0.16	Low
17	Dividing Panel	GF F 1	0.049	20	0.25	Low
18	Dividing Panel	FF F 1	0.013	20	0.07	Low
19	Dividing Panel	GF F 2	0.020	20	0.10	Low
20	Dividing Panel	FF F 2	0.010	20	0.05	Low
					External NTHAS Category	**3**

Table D.4.4

© Michael Dyson Associates Ltd.

RPS Planning & Development						
Tables of Results						
REEMA FLATS - CHLORIDE CONTENT ANALYSIS				Nicholls Colton Report Nr. 14746/MDA/001		
Address	Doune House			**Area**	Bletchley	
MDA Ref Nr	**Component**	**Location**	**% Chloride Content by Weight of Concrete**	**% Cement Content**	**% Chloride Content by Weight of Cement**	**BRE Classification (Risk of Corrosion)**
01	Column	GF RH G 2	0.010	20	0.05	Low
02	Column	GF F 2	0.013	20	0.07	Low
03	Column	GF F 5	0.004	20	0.02	Low
04	Column	GF LH G 3	0.004	20	0.02	Low
05	Ringbeam	GF RH G 2	0.189	20	0.95	Moderate
06	Ringbeam	GF RH G 1	0.223	20	1.12	High
07	Ringbeam	GF F 1	0.200	20	1.00	High
08	Ringbeam	GF F 2	0.130	20	0.65	Moderate
09	Panel	GF RH G 1	0.013	20	0.07	Low
10	Panel	GF RH G 2	0.179	20	0.90	Moderate
11	Panel	GF F 1	0.112	20	0.56	Moderate
12	Panel	GF F 2	0.095	20	0.48	Moderate
13	Panel	GF F 3	0.056	20	0.28	Low
14	Panel	GF F 4	0.126	20	0.63	Moderate
15	Panel	GF LH G 1	0.018	20	0.09	Low
16	Panel	GF LH G 2	0.169	20	0.85	Moderate
17	Dividing Panel	GF RH G 1	0.077	20	0.39	Low
18	Dividing Panel	GF LH G 1	0.102	20	0.51	Moderate
19	Dividing Panel	FF LH G 1	0.052	20	0.26	Low
20	Dividing Panel	FF RH G 1	0.094	20	0.47	Moderate
					External NTHAS Category	**4**

Table D.4.5

© Michael Dyson Associates Ltd.

RPS Planning & Development						
Tables of Results						
REEMA FLATS - CHLORIDE CONTENT ANALYSIS				Nicholls Colton Report Nr.		
Address	Edinburgh House			**Area**	Bletchley	
MDA Ref Nr	**Component**	**Location**	**% Chloride Content by Weight of Concrete**	**% Cement Content**	**% Chloride Content by Weight of Cement**	**BRE Classification (Risk of Corrosion)**
01	Column	GF F 2	0.002	20	0.01	Low
02	Column	GF F 5	0.004	20	0.02	Low
03	Column	GF LH G 3	0.029	20	0.15	Low
04	Column	GF LH G 7	0.114	20	0.57	Moderate
05	Ringbeam	GF F 1	0.195	20	0.98	Moderate
06	Ringbeam	GF F 2	0.131	20	0.66	Moderate
07	Ringbeam	GF LH G 4	0.117	20	0.59	Moderate
08	Ringbeam	GF LH G 5	0.103	20	0.52	Moderate
09	Panel	GF F 2	0.073	20	0.37	Low
10	Panel	GF F 1	0.086	20	0.43	Moderate
11	Panel	GF F 4	0.109	20	0.55	Moderate
12	Panel	GF F 3	0.095	20	0.48	Moderate
13	Panel	GF LH G 1	0.100	20	0.50	Moderate
14	Panel	GF LH G 2	0.100	20	0.50	Moderate
15	Panel	GF LH G 4	0.904	20	4.52	High
16	Panel	GF LH G 5	0.106	20	0.53	Moderate
17	Dividing Panel	GF LH G 1	0.244	20	1.22	High
18	Dividing Panel	FF LH G 1	0.198	20	0.99	Moderate
19	Dividing Panel	GF RH G 1	0.306	20	1.53	High
20	Dividing Panel	FF RH G 1	0.323	20	1.62	High
					External NTHAS Category	**4**

Table D.4.6

© Michael Dyson Associates Ltd.

RPS Planning & Development						
Tables of Results						
REEMA FLATS - CHLORIDE CONTENT ANALYSIS				Nicholls Colton Report Nr. 14746/MDA/001		
Address	Fife House			**Area**	Bletchley	
MDA Ref Nr	**Component**	**Location**	**% Chloride Content by Weight of Concrete**	**% Cement Content**	**% Chloride Content by Weight of Cement**	**BRE Classification (Risk of Corrosion)**
01	Column	GF RH G 6	0.130	20	0.65	Moderate
02	Column	GF RH G 5	0.013	20	0.07	Low
03	Column	GF F 5	0.179	20	0.90	Moderate
04	Column	GF F 2	0.112	20	0.56	Moderate
05	Ringbeam	GF RH G 4	0.095	20	0.48	Moderate
06	Ringbeam	GF RH G 5	0.056	20	0.28	Low
07	Ringbeam	GF R 1	0.126	20	0.63	Moderate
08	Ringbeam	GF R 2	0.018	20	0.09	Low
09	Panel	GF RH G 4	0.169	20	0.85	Moderate
10	Panel	GF RH G 3	0.077	20	0.39	Low
11	Panel	GF RH G 5	0.102	20	0.51	Moderate
12	Panel	GF RH G 1	0.052	20	0.26	Low
13	Panel	GF RH G 2	0.094	20	0.47	Moderate
14	Panel	GF F 1	0.130	20	0.65	Moderate
15	Panel	GF F 2	0.013	20	0.07	Low
16	Panel	GF F 3	0.179	20	0.90	Moderate
17	Dividing Panel	GF R 1	0.112	20	0.56	Moderate
18	Dividing Panel	FF R 1	0.095	20	0.48	Moderate
19	Dividing Panel	GF RH G 1	0.056	20	0.28	Low
20	Dividing Panel	FF RH G 1	0.126	20	0.63	Moderate
					External NTHAS Category	**4**

Table D.4.7

© Michael Dyson Associates Ltd.

RPS Planning & Development						
Tables of Results						
REEMA FLATS - CHLORIDE CONTENT ANALYSIS				Nicholls Colton Report Nr. 14746/MDA/001		
Address	Lanark House			**Area**	Bletchley	
MDA Ref Nr	**Component**	**Location**	**% Chloride Content by Weight of Concrete**	**% Cement Content**	**% Chloride Content by Weight of Cement**	**BRE Classification (Risk of Corrosion)**
01	Column	GF LH G 7	0.004	20	0.02	Low
02	Column	GF R 2	0.008	20	0.04	Low
03	Column	GF LH G 2	0.017	20	0.09	Low
04	Column	GF R 5	0.010	20	0.05	Low
05	Ringbeam	GF LH G 4	0.137	20	0.69	Moderate
06	Ringbeam	GF LH G 3	0.129	20	0.65	Moderate
07	Ringbeam	GF R 2	0.036	20	0.18	Low
08	Ringbeam	GF R 1	0.141	20	0.71	Moderate
09	Panel	GF LH G 5	0.098	20	0.49	Moderate
10	Panel	GF LH G 4	0.066	20	0.33	Low
11	Panel	GF LH G 3	0.118	20	0.59	Moderate
12	Panel	GF R 1	0.088	20	0.44	Low
13	Panel	GF R 2	0.049	20	0.25	Low
14	Panel	GF LH G 1	0.160	20	0.80	Moderate
15	Panel	GF LH G 2	0.129	20	0.65	Moderate
16	Panel	GF R 3	0.136	20	0.68	Moderate
17	Dividing Panel	GF LH G 1	0.074	20	0.37	Low
18	Dividing Panel	FF LH G 1	0.043	20	0.22	Low
19	Dividing Panel	GF R 1	0.074	20	0.37	Low
20	Dividing Panel	FF R 2	0.010	20	0.05	Low
					External NTHAS Category	**4**

Table D.4.8

© Michael Dyson Associates Ltd.

RPS Planning & Development						
Tables of Results						
REEMA FLATS - CHLORIDE CONTENT ANALYSIS				Nicholls Colton Report Nr.		
Address	Lewes House			**Area**	Bletchley	
MDA Ref Nr	**Component**	**Location**	**% Chloride Content by Weight of Concrete**	**% Cement Content**	**% Chloride Content by Weight of Cement**	**BRE Classification (Risk of Corrosion)**
01	Column	GF F 2	0.009	20	0.05	Low
02	Column	GF F 5	0.007	20	0.04	Low
03	Column	GF RH G 2	0.005	20	0.03	Low
04	Column	GF RH G 8	0.007	20	0.04	Low
05	Ringbeam	GF F 1	0.169	20	0.85	Moderate
06	Ringbeam	GF F 2	0.213	20	1.07	High
07	Ringbeam	GF RH G 5	0.102	20	0.51	Moderate
08	Ringbeam	GF RH G 4	0.208	20	1.04	High
09	Panel	GF F 1	0.119	20	0.60	Moderate
10	Panel	GF F 2	0.089	20	0.45	Moderate
11	Panel	GF F 3	0.142	20	0.71	Moderate
12	Panel	GF F 4	0.175	20	0.88	Moderate
13	Panel	GF RH G 1	0.103	20	0.52	Moderate
14	Panel	GF RH G 2	0.153	20	0.77	Moderate
15	Panel	GF RH G 3	0.157	20	0.79	Moderate
16	Panel	GF RH G 4	0.089	20	0.45	Moderate
17	Dividing Panel	GF RH G 1	0.197	20	0.99	Moderate
18	Dividing Panel	FF RH G 1	0.202	20	1.01	High
19	Dividing Panel	GF R 1	0.122	20	0.61	Moderate
20	Dividing Panel	FF R 1	0.153	20	0.77	Moderate
					External NTHAS Category	**4**

Table D.4.9

© Michael Dyson Associates Ltd.

RPS Planning & Development						
Tables of Results						
REEMA FLATS - CHLORIDE CONTENT ANALYSIS				Nicholls Colton Report Nr. 14746/MDA/001		
Address	Pembroke House			**Area**	Bletchley	
MDA Ref Nr	**Component**	**Location**	**% Chloride Content by Weight of Concrete**	**% Cement Content**	**% Chloride Content by Weight of Cement**	**BRE Classification (Risk of Corrosion)**
01	Column	GF RH G 4	0.004	20	0.02	Low
02	Column	GF RH G 5	0.010	20	0.05	Low
03	Column	GF F 5	0.006	20	0.03	Low
04	Column	GF LH G 2	0.007	20	0.04	Low
05	Ringbeam	GF RH G 3	0.084	20	0.42	Low
06	Ringbeam	GF R 4	0.119	20	0.60	Moderate
07	Ringbeam	GF R 5	0.108	20	0.54	Moderate
08	Ringbeam	GF LH G 1	0.165	20	0.83	Moderate
09	Panel	GF RH G 3	0.102	20	0.51	Moderate
10	Panel	GF RH G 4	0.118	20	0.59	Moderate
11	Panel	GF RH G 5	0.164	20	0.82	Moderate
12	Panel	GF R 3	0.109	20	0.55	Moderate
13	Panel	GF R 4	0.111	20	0.56	Moderate
14	Panel	GF F 3	0.134	20	0.67	Moderate
15	Panel	GF F 4	0.141	20	0.71	Moderate
16	Panel	GF LH G 1	0.256	20	1.28	High
17	Dividing Panel	GF R 1	0.066	20	0.33	Low
18	Dividing Panel	FF R 1	0.155	20	0.78	Moderate
19	Dividing Panel	GF LH G 1	0.132	20	0.66	Moderate
20	Dividing Panel	FF LH G 1	0.134	20	0.67	Moderate
					External NTHAS Category	**4**

Table D.4.10

© Michael Dyson Associates Ltd.

RPS Planning & Development						
Tables of Results						
REEMA FLATS - CHLORIDE CONTENT ANALYSIS				Nicholls Colton Report Nr. 14746/MDA/001		
Address	Rutland House			**Area**	Bletchley	
MDA Ref Nr	**Component**	**Location**	**% Chloride Content by Weight of Concrete**	**% Cement Content**	**% Chloride Content by Weight of Cement**	**BRE Classification (Risk of Corrosion)**
01	Column	GF F 5	0.008	20	0.04	Low
02	Column	GF F 2	0.004	20	0.02	Low
03	Column	GF R 2	0.017	20	0.09	Low
04	Column	GF RH G 6	0.017	20	0.09	Low
05	Ringbeam	GF F 4	0.147	20	0.74	Moderate
06	Ringbeam	GF F 3	0.095	20	0.48	Moderate
07	Ringbeam	GF RH G 2	0.172	20	0.86	Moderate
08	Ringbeam	GF R 1	0.151	20	0.76	Moderate
09	Panel	GF F 4	0.136	20	0.68	Moderate
10	Panel	GF F 3	0.125	20	0.63	Moderate
11	Panel	GF F 2	0.118	20	0.59	Moderate
12	Panel	GF F 1	0.106	20	0.53	Moderate
13	Panel	GF RH G 1	0.101	20	0.51	Moderate
14	Panel	GF RH G 2	0.193	20	0.97	Moderate
15	Panel	GF R 2	0.154	20	0.77	Moderate
16	Panel	GF R 4	0.211	20	1.06	High
17	Dividing Panel	GF RH G 1	0.132	20	0.66	Moderate
18	Dividing Panel	FF RH G 2	0.153	20	0.77	Moderate
19	Dividing Panel	GF R 1	0.140	20	0.70	Moderate
20	Dividing Panel	FF R 2	0.189	20	0.95	Moderate
					External NTHAS Category	**4**

Table D.4.11

© Michael Dyson Associates Ltd.

RPS Planning & Development						
Tables of Results						
Summary of Chloride Results						
Component	**Nr Tested**	**Nr Samples Exceeding 1.0% Chloride Ion Content**	**Nr Samples Exceeding 0.6% Chloride Ion Content**	**% Samples Exceeding 0.6% Chloride Ion Content**	**External NTHAS Category**	**NTHAS Category**
4 Storey Reema Flats Blocks at Bletchley						
Panel	88	3	28	32%	4	**4**
Dividing Panel / Party Wall Panel	44	5	20	45%	4	
Column	44	0	2	5%	3	
Ringbeam	44	4	25	57%	4	
Summary	**220**	**12**	**75**	**34%**	**4**	

Table D.5

RPS Planning & Development

Tables of Results

Summary of Depth of Cover and Carbonation - Reema Flats Blocks

MDA Ref.	Address	Component	Location	Max Depth of Carbonation (mm)	Depth of Cover (mm)	Carbonation Exceeds Cover	Steel Condition
1.1	Argyll House	Column	GF R2	1	-	No	-
		Column	GF LH G 7	1	-	No	-
		Panel	GF R 1	30	50	No	*1
		Panel	GF LH G 5	30	55	No	*1
		Dividing Panel	FF R 1	20	60	No	1
Summary			**GF**	**15**	**55**	**No**	***1**

Legend - Steel Condition

Condition 0 - Tendon perfect - no corrosion evident.

Condition 1 - Tendon with slight surface corrosion. No visible loss of sound metal at any one cross-section.

Condition 2 - Tendon with surface corrosion and pitting at the onset of visible loss of cross-sectional area of sound metal. Small reduction of tensile strength possible.

Condition 3 - Severely corroded tendon. Estimated 20% or more of area lost at any one cross-section and corresponding reduction of tensile strength.

*1 - No steel exposed; cover depth recorded with meter.

Table D.6.1

© Michael Dyson Associates Ltd.

RPS Planning & Development

Tables of Results

Summary of Depth of Cover and Carbonation - Reema Flats Blocks

MDA Ref.	Address	Component	Location	Max Depth of Carbonation (mm)	Depth of Cover (mm)	Carbonation Exceeds Cover	Steel Condition
1.2	66-76 Avon House	Column	GF F 2	1	-	No	-
		Column	GF RH G 2	1	-	No	-
		Panel	GF F 1	10	40	No	*1
		Panel	GF RH G 1	5	50	No	1
Summary			**GF**	**5**	**45**	**No**	***1**

*By calculation from component dimmensions

Condition 0 - Tendon perfect - no corrosion evident.

Condition 1 - Tendon with slight surface corrosion. No visible loss of sound metal at any one cross-section.

Condition 2 - Tendon with surface corrosion and pitting at the onset of visible loss of cross-sectional area of sound metal. Small reduction of tensile strength possible.

Condition 3 - Severely corroded tendon. Estimated 20% or more of area lost at any one cross-section and corresponding reduction of tensile strength.

*1 - No steel exposed; cover depth recorded with meter.

Table D.6.2

© Michael Dyson Associates Ltd.

RPS Planning & Development							
Tables of Results							
Summary of Depth of Cover and Carbonation - Reema Flats Blocks							
MDA Ref.	Address	Component	Location	Max Depth of Carbonation (mm)	Depth of Cover (mm)	Carbonation Exceeds Cover	Steel Condition
1.3	78-100 Avon House	Column	GF LH G 3	1	-	No	-
		Column	GF F 2	1	-	No	-
		Panel	GF LH G 1	20	45	No	*1
		Panel	GF F 1	25	50	No	*1
		Dividing Panel	GF LH G 1	Fully @ 30	20	Yes	2
Summary			**GF**	**15**	**40**	**No**	***1**

Legend - Steel Condition

Condition 0 - Tendon perfect - no corrosion evident.

Condition 1 - Tendon with slight surface corrosion. No visible loss of sound metal at any one cross-section.

Condition 2 - Tendon with surface corrosion and pitting at the onset of visible loss of cross-sectional area of sound metal. Small reduction of tensile strength possible.

Condition 3 - Severely corroded tendon. Estimated 20% or more of area lost at any one cross-section and corresponding reduction of tensile strength.

*1 - No steel exposed; cover depth recorded with meter.

Table D.6.3

© Michael Dyson Associates Ltd.

RPS Planning & Development

Tables of Results

Summary of Depth of Cover and Carbonation - Reema Flats Blocks

MDA Ref.	Address	Component	Location	Max Depth of Carbonation (mm)	Depth of Cover (mm)	Carbonation Exceeds Cover	Steel Condition
1.4	Cherwell House	Column	GF F 5	1	-	No	-
		Column	GF F 11	1	-	No	-
		Panel	GF F 3	10	45	No	*1
		Panel	GF F 8	30	50	No	1
Summary			**GF**	**10**	**45**	**No**	**1**

*By calculation from component dimmensions

Condition 0 - Tendon perfect - no corrosion evident.

Condition 1 - Tendon with slight surface corrosion. No visible loss of sound metal at any one cross-section.

Condition 2 - Tendon with surface corrosion and pitting at the onset of visible loss of cross-sectional area of sound metal. Small reduction of tensile strength possible.

Condition 3 - Severely corroded tendon. Estimated 20% or more of area lost at any one cross-section and corresponding reduction of tensile strength.

*1 - No steel exposed; cover depth recorded with meter.

Table D.6.4

© Michael Dyson Associates Ltd.

RPS Planning & Development

Tables of Results

Summary of Depth of Cover and Carbonation - Reema Flats Blocks

MDA Ref.	Address	Component	Location	Max Depth of Carbonation (mm)	Depth of Cover (mm)	Carbonation Exceeds Cover	Steel Condition
1.5	Doune House	Column	GF RH G 2	1	-	No	-
		Column	GF F 2	1	-	No	-
		Panel	GF RH G 1	Fully @ 80	50	Yes	*1
		Panel	GF F 2	30	45	No	*1
Summary				**30**	**45**	**No**	***1**

*By calculation from component dimmensions

Condition 0 - Tendon perfect - no corrosion evident.

Condition 1 - Tendon with slight surface corrosion. No visible loss of sound metal at any one cross-section.

Condition 2 - Tendon with surface corrosion and pitting at the onset of visible loss of cross-sectional area of sound metal. Small reduction of tensile strength possible.

Condition 3 - Severely corroded tendon. Estimated 20% or more of area lost at any one cross-section and corresponding reduction of tensile strength.

*1 - No steel exposed; cover depth recorded with meter.

Table D.6.5

© Michael Dyson Associates Ltd.

RPS Planning & Development

Tables of Results

Summary of Depth of Cover and Carbonation - Reema Flats Blocks

MDA Ref.	Address	Component	Location	Max Depth of Carbonation (mm)	Depth of Cover (mm)	Carbonation Exceeds Cover	Steel Condition
1.6	Edinburgh House	Column	GF F 2	1	-	No	-
		Column	GF LH G 7	1	-	No	-
		Panel	GF F 2	20	45	No	*1
		Panel	GF LH G 5	5	50	No	*1
		Dividing Panel	GF LH G 1	20	30	No	3
Summary			**GF**	**10**	**40**	**No**	***1**

Legend - Steel Condition

Condition 0 - Tendon perfect - no corrosion evident.

Condition 1 - Tendon with slight surface corrosion. No visible loss of sound metal at any one cross-section.

Condition 2 - Tendon with surface corrosion and pitting at the onset of visible loss of cross-sectional area of sound metal. Small reduction of tensile strength possible.

Condition 3 - Severely corroded tendon. Estimated 20% or more of area lost at any one cross-section and corresponding reduction of tensile strength.

*1 - No steel exposed; cover depth recorded with meter.

Table D.6.6

© Michael Dyson Associates Ltd.

RPS Planning & Development

Tables of Results

Summary of Depth of Cover and Carbonation - Reema Flats Blocks

MDA Ref.	Address	Component	Location	Max Depth of Carbonation (mm)	Depth of Cover (mm)	Carbonation Exceeds Cover	Steel Condition
1.7	Fife House	Column	GF RH G 6	1	-	No	-
		Column	GF F 2	1	-	No	-
		Panel	GF RH G 3	30	50	No	*1
		Panel	GF F 2	30	60	No	1
Summary			**GF**	**15**	**55**	**No**	***1**

*By calculation from component dimmensions

Condition 0 - Tendon perfect - no corrosion evident.

Condition 1 - Tendon with slight surface corrosion. No visible loss of sound metal at any one cross-section.

Condition 2 - Tendon with surface corrosion and pitting at the onset of visible loss of cross-sectional area of sound metal. Small reduction of tensile strength possible.

Condition 3 - Severely corroded tendon. Estimated 20% or more of area lost at any one cross-section and corresponding reduction of tensile strength.

*1 - No steel exposed; cover depth recorded with meter.

Table D.6.7

© Michael Dyson Associates Ltd.

RPS Planning & Development

Tables of Results

Summary of Depth of Cover and Carbonation - Reema Flats Blocks

MDA Ref.	Address	Component	Location	Max Depth of Carbonation (mm)	Depth of Cover (mm)	Carbonation Exceeds Cover	Steel Condition
1.8	Lanark House	Column	GF LH G 7	1	-	No	-
		Column	GF R 2	1	-	No	-
		Panel	GF LH G 5	30	60	No	*1
		Panel	GF R 1	20	60	No	1
Summary			**GF**	**15**	**60**	**No**	***1**

*By calculation from component dimmensions

Condition 0 - Tendon perfect - no corrosion evident.

Condition 1 - Tendon with slight surface corrosion. No visible loss of sound metal at any one cross-section.

Condition 2 - Tendon with surface corrosion and pitting at the onset of visible loss of cross-sectional area of sound metal. Small reduction of tensile strength possible.

Condition 3 - Severely corroded tendon. Estimated 20% or more of area lost at any one cross-section and corresponding reduction of tensile strength.

*1 - No steel exposed; cover depth recorded with meter.

Table D.6.8

© Michael Dyson Associates Ltd.

RPS Planning & Development							
Tables of Results							
Summary of Depth of Cover and Carbonation - Reema Flats Blocks							
MDA Ref.	Address	Component	Location	Max Depth of Carbonation (mm)	Depth of Cover (mm)	Carbonation Exceeds Cover	Steel Condition
1.9	Lewes House	Column	GF F 2	1	-	No	-
		Column	GF RH G 2	1	-	No	-
		Panel	GF F 2	10	40	No	*1
		Panel	GF RH G 1	10	45	No	*1
		Dividing Panel	GF R 1	Fully @ 35	30	Yes	3
Summary			**GF**	**10**	**25**	**No**	***1**

Legend - Steel Condition

Condition 0 - Tendon perfect - no corrosion evident.

Condition 1 - Tendon with slight surface corrosion. No visible loss of sound metal at any one cross-section.

Condition 2 - Tendon with surface corrosion and pitting at the onset of visible loss of cross-sectional area of sound metal. Small reduction of tensile strength possible.

Condition 3 - Severely corroded tendon. Estimated 20% or more of area lost at any one cross-section and corresponding reduction of tensile strength.

*1 - No steel exposed; cover depth recorded with meter.

Table D.6.9

© Michael Dyson Associates Ltd.

RPS Planning & Development

Tables of Results

Summary of Depth of Cover and Carbonation - Reema Flats Blocks

MDA Ref.	Address	Component	Location	Max Depth of Carbonation (mm)	Depth of Cover (mm)	Carbonation Exceeds Cover	Steel Condition
1.10	Pembroke House	Column	GF RH G 4	1	-	No	-
		Column	GF F 5	Fully @ 30	-	Yes	-
		Panel	GF RH G 3	1	60	No	1
		Panel	GF F 4	20	50	No	*1
Summary			**GF**	**15**	**55**	**No**	***1**

*By calculation from component dimmensions

Condition 0 - Tendon perfect - no corrosion evident.

Condition 1 - Tendon with slight surface corrosion. No visible loss of sound metal at any one cross-section.

Condition 2 - Tendon with surface corrosion and pitting at the onset of visible loss of cross-sectional area of sound metal. Small reduction of tensile strength possible.

Condition 3 - Severely corroded tendon. Estimated 20% or more of area lost at any one cross-section and corresponding reduction of tensile strength.

*1 - No steel exposed; cover depth recorded with meter.

Table D.6.10

© Michael Dyson Associates Ltd.

RPS Planning & Development

Tables of Results

Summary of Depth of Cover and Carbonation - Reema Flats Blocks

MDA Ref.	Address	Component	Location	Max Depth of Carbonation (mm)	Depth of Cover (mm)	Carbonation Exceeds Cover	Steel Condition
1.11	Rutland House	Column	GF F 5	1	-	No	-
		Column	GF R 2	1	-	No	-
		Panel	GF F 4	20	50	No	*1
		Panel	GF R 1	30	40	No	1
Summary			**GF**	**15**	**45**	**No**	***1**

*By calculation from component dimmensions

Condition 0 - Tendon perfect - no corrosion evident.

Condition 1 - Tendon with slight surface corrosion. No visible loss of sound metal at any one cross-section.

Condition 2 - Tendon with surface corrosion and pitting at the onset of visible loss of cross-sectional area of sound metal. Small reduction of tensile strength possible.

Condition 3 - Severely corroded tendon. Estimated 20% or more of area lost at any one cross-section and corresponding reduction of tensile strength.

*1 - No steel exposed; cover depth recorded with meter.

Table D.6.11

© Michael Dyson Associates Ltd.

Nicholls Colton Analytical
7-11 Harding Street, Leicester, LE1 4DH
Tel: 0116 253 6333. Fax: 0116 251 4709
e-mail: testing@nicholls-colton.co.uk
website: www.nicholls-colton.co.uk

0320

TEST REPORT

BS1881 CHLORIDE CONTENT

7551 – RPS Planning & Development (Milton Keynes)

Report no. 14746/MDA/001	
Order reference: 6157	Date of testing: 09.2013
Date of receipt: 09.09.2013	Date of issue: 19.09.2013

NCA sample reference:	Client sample identification:	Component	Location	Sample type	**Chloride Ion Content (% by mass of cement)**
Argyll House, Reema Flats					
1	01	Column	GF RH G 2	Concrete Dust	**0.74**
2	02	Column	GF R 2	Concrete Dust	**0.04**
3	03	Column	GF RH G 6	Concrete Dust	**0.05**
4	04	Column	GF LH G 7	Concrete Dust	**0.06**
5	05	Ringbeam	GF RH G 2	Concrete Dust	**1.17**
6	06	Ringbeam	GF R 2	Concrete Dust	**1.31**
7	07	Ringbeam	GF LH G 2	Concrete Dust	**1.06**
8	08	Ringbeam	GF LH G 1	Concrete Dust	**0.75**
9	09	Panel	GF RH G 2	Concrete Dust	**1.20**
10	10	Panel	GF RH G 1	Concrete Dust	**0.18**
11	11	Panel	GF R 2	Concrete Dust	**1.13**
12	12	Panel	GF RH G 4	Concrete Dust	**1.01**
13	13	Panel	GF RH G 3	Concrete Dust	**0.73**
14	14	Panel	GF RH G 5	Concrete Dust	**0.74**
15	15	Panel	GF RH G 4	Concrete Dust	**0.72**
16	16	Panel	GF RH G 3	Concrete Dust	**0.55**
17	17	Dividing Panel	GF RH G 1	Concrete Dust	**0.48**
18	18	Dividing Panel	GF R 1	Concrete Dust	**0.60**
19	19	Dividing Panel	FF R 2	Concrete Dust	**1.19**
20	20	Dividing Panel	GF LH G 1	Concrete Dust	**0.88**

14746/MDA/001

NCA sample reference:	Client sample identification:	Component	Location	Sample type	**Chloride Ion Content (% by mass of cement)**
66-76 Avon House, Reema Flats					
21	01	Column	GF F 2	Concrete Dust	**0.08**
22	02	Column	GF F 6	Concrete Dust	**0.19**
23	03	Column	GF RH G 2	Concrete Dust	**0.09**
24	04	Column	GF LH G 3	Concrete Dust	**0.03**
25	05	Ringbeam	GF F 2	Concrete Dust	**0.91**
26	06	Ringbeam	GF F 1	Concrete Dust	**0.48**
27	07	Ringbeam	GF F 4	Concrete Dust	**0.84**
28	08	Ringbeam	GF F 5	Concrete Dust	**0.85**
29	09	Panel	GF F 1	Concrete Dust	**0.56**
30	10	Panel	GF F 2	Concrete Dust	**1.03**
31	11	Panel	GF F 4	Concrete Dust	**0.70**
32	12	Panel	GF F 5	Concrete Dust	**0.80**
33	13	Panel	GF RH G 1	Concrete Dust	**0.75**
34	14	Panel	GF RH G 2	Concrete Dust	**0.61**
35	15	Panel	GF LH G 2	Concrete Dust	**0.40**
36	16	Panel	GF LH G 1	Concrete Dust	**0.68**
37	17	Dividing Panel	GF RH G 1	Concrete Dust	**0.20**
38	18	Dividing Panel	FF RH G 1	Concrete Dust	**0.44**
39	19	Dividing Panel	GF LH G 1	Concrete Dust	**0.77**
40	20	Dividing Panel	FF LH G 1	Concrete Dust	**0.13**

14746/MDA/001

NCA sample reference:	Client sample identification:	Component	Location	Sample type	**Chloride Ion Content (% by mass of cement)**
90-100 Avon House, Reema Flats					
41	01	Column	GF LH G 3	Concrete Dust	**0.05**
42	02	Column	GF F 2	Concrete Dust	**0.05**
43	03	Column	GF F 5	Concrete Dust	**0.04**
44	04	Column	GF RH G 2	Concrete Dust	**0.08**
45	05	Ringbeam	GF LH G 2	Concrete Dust	**0.61**
46	06	Ringbeam	GF LH G 1	Concrete Dust	**0.70**
47	07	Ringbeam	GF F 4	Concrete Dust	**0.75**
48	08	Ringbeam	GF RH G 2	Concrete Dust	**0.48**
49	09	Panel	GF LH G 1	Concrete Dust	**0.61**
50	10	Panel	GF LH G 2	Concrete Dust	**0.45**
51	11	Panel	GF F1	Concrete Dust	**0.84**
52	12	Panel	GF F 2	Concrete Dust	**0.88**
53	13	Panel	GF F 3	Concrete Dust	**0.79**
54	14	Panel	GF F 4	Concrete Dust	**0.74**
55	15	Panel	GF RH G 1	Concrete Dust	**0.73**
56	16	Panel	GF RH G 2	Concrete Dust	**0.71**
57	17	Dividing Panel	GF LH G 1	Concrete Dust	**0.12**
58	18	Dividing Panel	FF LH G 1	Concrete Dust	**0.04**
59	19	Dividing Panel	GF RH G 1	Concrete Dust	**1.31**
60	20	Dividing Panel	GF RH G 1	Concrete Dust	**0.24**

14746/MDA/001

NCA sample reference:	Client sample identification:	Component	Location	Sample type	**Chloride Ion Content (% by mass of cement)**
Cherwell House, Reema Flats					
61	01	Column	GF F 5	Concrete Dust	**0.05**
62	02	Column	GF F 11	Concrete Dust	**0.08**
63	03	Column	GF F 14	Concrete Dust	**0.14**
64	04	Column	GF F 17	Concrete Dust	**0.04**
65	05	Ringbeam	GF F 3	Concrete Dust	**0.11**
66	06	Ringbeam	GF F 4	Concrete Dust	**1.27**
67	07	Ringbeam	GF F 7	Concrete Dust	**0.33**
68	08	Ringbeam	GF F 8	Concrete Dust	**0.40**
69	09	Panel	GF F 3	Concrete Dust	**0.24**
70	10	Panel	GF F 4	Concrete Dust	**0.56**
71	11	Panel	GF F 7	Concrete Dust	**0.20**
72	12	Panel	GF F 8	Concrete Dust	**0.23**
73	13	Panel	GF F 9	Concrete Dust	**0.77**
74	14	Panel	GF F 10	Concrete Dust	**0.24**
75	15	Panel	GF F 11	Concrete Dust	**0.04**
76	16	Panel	GF F 12	Concrete Dust	**0.23**
77	17	Dividing Panel	GF F 1	Concrete Dust	**0.35**
78	18	Dividing Panel	FF F 1	Concrete Dust	**0.09**
79	19	Dividing Panel	GF F 2	Concrete Dust	**0.14**
80	20	Dividing Panel	FF F 2	Concrete Dust	**0.07**

14746/MDA/001

NCA sample reference:	Client sample identification:	Component	Location	Sample type	**Chloride Ion Content (% by mass of cement)**
Doune House, Remma Flats					
81	01	Column	GF RH G 2	Concrete Dust	**0.07**
82	02	Column	GF F 2	Concrete Dust	**0.09**
83	03	Column	GF F 5	Concrete Dust	**0.03**
84	04	Column	GF LH G 3	Concrete Dust	**<0.03**
85	05	Ringbeam	GF RH G 2	Concrete Dust	**1.35**
86	06	Ringbeam	GF RH G 1	Concrete Dust	**1.59**
87	07	Ringbeam	GF F 1	Concrete Dust	**1.43**
88	08	Ringbeam	GF F 2	Concrete Dust	**0.93**
89	09	Panel	GF RH G 1	Concrete Dust	**0.09**
90	10	Panel	GF RH G 2	Concrete Dust	**1.28**
91	11	Panel	GF F 1	Concrete Dust	**0.80**
92	12	Panel	GF F 2	Concrete Dust	**0.68**
93	13	Panel	GF F 3	Concrete Dust	**0.40**
94	14	Panel	GF F 4	Concrete Dust	**0.90**
95	15	Panel	GF LH G 1	Concrete Dust	**0.13**
96	16	Panel	GF LH G 2	Concrete Dust	**1.21**
97	17	Dividing Panel	GF RH G 1	Concrete Dust	**0.55**
98	18	Dividing Panel	GF LH G 1	Concrete Dust	**0.73**
99	19	Dividing Panel	FF LH G 1	Concrete Dust	**0.37**
100	20	Dividing Panel	FF RH G1	Concrete Dust	**0.67**

14746/MDA/001

NCA sample reference:	Client sample identification:	Component	Location	Sample type	**Chloride Ion Content (% by mass of cement)**
Fife House, Reema Flats					
101	01	Column	GF RH G 6	Concrete Dust	**0.93**
102	02	Column	GF RH G 5	Concrete Dust	**0.09**
103	03	Column	GF F 5	Concrete Dust	**1.28**
104	04	Column	GF F 2	Concrete Dust	**0.80**
105	05	Ringbeam	GF RH G 4	Concrete Dust	**0.68**
106	06	Ringbeam	GF RH G 5	Concrete Dust	**0.40**
107	07	Ringbeam	GF R 1	Concrete Dust	**0.90**
108	08	Ringbeam	GF R 2	Concrete Dust	**0.13**
109	09	Panel	GF RH G 4	Concrete Dust	**1.21**
110	10	Panel	GF RH G 3	Concrete Dust	**0.55**
111	11	Panel	GF RH G 5	Concrete Dust	**0.73**
112	12	Panel	GF RH G 1	Concrete Dust	**0.37**
113	13	Panel	GF RH G 2	Concrete Dust	**0.67**
114	14	Panel	GF F 1	Concrete Dust	**0.93**
115	15	Panel	GF F 2	Concrete Dust	**0.09**
116	16	Panel	GF F 3	Concrete Dust	**1.28**
117	17	Dividing Panel	GF R 1	Concrete Dust	**0.80**
118	18	Dividing Panel	FF R 1	Concrete Dust	**0.68**
119	19	Dividing Panel	GF RH G 1	Concrete Dust	**0.40**
120	20	Dividing Panel	FF RH G1	Concrete Dust	**0.90**

14746/MDA/001

NCA sample reference:	Client sample identification:	Component	Location	Sample type	**Chloride Ion Content (% by mass of cement)**
Lanark House, Reema Flats					
121	01	Column	GF LH G 7	Concrete Dust	**< 0.03**
122	02	Column	GF R 2	Concrete Dust	**0.06**
123	03	Column	GF LH G 2	Concrete Dust	**0.12**
124	04	Column	GF R 5	Concrete Dust	**0.07**
125	05	Ringbeam	GF LH G 4	Concrete Dust	**0.98**
126	06	Ringbeam	GF LH G 3	Concrete Dust	**0.92**
127	07	Ringbeam	GF R 2	Concrete Dust	**0.26**
128	08	Ringbeam	GF R 1	Concrete Dust	**1.01**
129	09	Panel	GF LH G 5	Concrete Dust	**0.70**
130	10	Panel	GF LH G 4	Concrete Dust	**0.47**
131	11	Panel	GF LH G 3	Concrete Dust	**0.84**
132	12	Panel	GF R 1	Concrete Dust	**0.63**
133	13	Panel	GF R 2	Concrete Dust	**0.35**
134	14	Panel	GF LH G 1	Concrete Dust	**1.14**
135	15	Panel	GF LH G 2	Concrete Dust	**0.92**
136	16	Panel	GF R 3	Concrete Dust	**0.97**
137	17	Dividing Panel	GF LH G 1	Concrete Dust	**0.53**
138	18	Dividing Panel	FF LH G 1	Concrete Dust	**0.31**
139	19	Dividing Panel	GF R 1	Concrete Dust	**0.53**
140	20	Dividing Panel	FF R 2	Concrete Dust	**0.07**

14746/MDA/001

NCA sample reference:	Client sample identification:	Component	Location	Sample type	**Chloride Ion Content (% by mass of cement)**
Pembroke House, Reema Flats					
141	01	Column	GF RH G 4	Concrete Dust	**0.03**
142	02	Column	GF RH G 5	Concrete Dust	**0.07**
143	03	Column	GF F 5	Concrete Dust	**0.04**
144	04	Column	GF LH G 2	Concrete Dust	**0.05**
145	05	Ringbeam	GF RH G 3	Concrete Dust	**0.60**
146	06	Ringbeam	GF R 4	Concrete Dust	**0.85**
147	07	Ringbeam	GF R 5	Concrete Dust	**0.77**
148	08	Ringbeam	GF LH G 1	Concrete Dust	**1.18**
149	09	Panel	GF RH G 3	Concrete Dust	**0.73**
150	10	Panel	GF RH G 4	Concrete Dust	**0.84**
151	11	Panel	GF RH G 5	Concrete Dust	**1.17**
152	12	Panel	GF R 3	Concrete Dust	**0.78**
153	13	Panel	GF R 4	Concrete Dust	**0.79**
154	14	Panel	GF F 3	Concrete Dust	**0.96**
155	15	Panel	GF F 4	Concrete Dust	**1.01**
156	16	Panel	GF LH G 1	Concrete Dust	**1.83**
157	17	Dividing Panel	GF R 1	Concrete Dust	**0.47**
158	18	Dividing Panel	FF R 1	Concrete Dust	**1.11**
159	19	Dividing Panel	GF LH G 1	Concrete Dust	**0.94**
160	20	Dividing Panel	FF LH G1	Concrete Dust	**0.96**

14746/MDA/001

NCA sample reference:	Client sample identification:	Component	Location	Sample type	**Chloride Ion Content (% by mass of cement)**
Rutland House, Reema Flats					
161	01	Column	GF F 5	Concrete Dust	**0.06**
162	02	Column	GF F 2	Concrete Dust	**<0.03**
163	03	Column	GF R 2	Concrete Dust	**0.12**
164	04	Column	GF RH G 6	Concrete Dust	**0.12**
165	05	Ringbeam	GF F 4	Concrete Dust	**1.05**
166	06	Ringbeam	GF F 3	Concrete Dust	**0.68**
167	07	Ringbeam	GF RH G 2	Concrete Dust	**1.23**
168	08	Ringbeam	GF R 1	Concrete Dust	**1.08**
169	09	Panel	GF F 4	Concrete Dust	**0.97**
170	10	Panel	GF F 3	Concrete Dust	**0.89**
171	11	Panel	GF F 2	Concrete Dust	**0.84**
172	12	Panel	GF F 1	Concrete Dust	**0.76**
173	13	Panel	GF RH G 1	Concrete Dust	**0.72**
174	14	Panel	GF RH G 2	Concrete Dust	**1.38**
175	15	Panel	GF R 2	Concrete Dust	**1.10**
176	16	Panel	GF R 4	Concrete Dust	**1.51**
177	17	Dividing Panel	GF RH G 1	Concrete Dust	**0.94**
178	18	Dividing Panel	FF RH G 2	Concrete Dust	**1.09**
179	19	Dividing Panel	GF R 1	Concrete Dust	**1.00**
180	20	Dividing Panel	FF R 2	Concrete Dust	**1.35**

NOTES:
1. Testing was in accordance with BS 1881: Part 124: 1988 Clause 10.2 using potentiometric titration.
2. A cement content of 14% was used in the calculation of chloride ion content.
3. Samples received were smaller than required by Clause 3.2 BS 1881 : Part 124 : 1988.
4. Samples were not passed over the 150micron BS Test Sieve before testing.
5. Quality control samples are tested with each batch of samples

[redacted]
[redacted]
Manager – Data Logistics
Nicholls Colton Analytical

Michael Dyson Associates Ltd
West House
Meltham Road
Honley
Holmfirth
West Yorkshire
HD9 6LB

Nicholls Colton Analytical
7-11 Harding Street, Leicester, LE1 4DH
Tel: 0116 253 6333. Fax: 0116 251 4709
e-mail: testing@nicholls-colton.co.uk
website: www.nicholls-colton.co.uk

0320

TEST REPORT

BS1881 CHLORIDE CONTENT

7551 – RPS Planning and Development

Report no. 14786/MDA/001	
Order reference: 6163	Date of testing: 20 to 23.09.2013
Date of receipt: 13.09.2013	Date of issue: 26.09.2013

NCA sample ref	MDA sample ref	Sample type	Component	Location	**Chloride Ion Content (% by mass of concrete)**	**Chloride Ion Content (% by mass of cement)**
Reema Flats – Edinburgh House						
1	01	Concrete Dust	Column	GF F2	**0.018**	**0.13**
2	02	Concrete Dust	Column	GF F 5	**0.004**	**0.03**
3	03	Concrete Dust	Column	GF LH G 3	**0.029**	**0.20**
4	04	Concrete Dust	Column	GF LH G 7	**0.114**	**0.82**
5	05	Concrete Dust	Ringbeam	GF F 1	**0.195**	**1.39**
6	06	Concrete Dust	Ringbeam	GF F 2	**0.131**	**0.93**
7	07	Concrete Dust	Ringbeam	GF LH G 4	**0.117**	**0.83**
8	08	Concrete Dust	Ringbeam	GF LH G 5	**0.103**	**0.74**
9	09	Concrete Dust	Panel	GF F 2	**0.073**	**0.52**
10	10	Concrete Dust	Panel	GF F 1	**0.086**	**0.62**
11	11	Concrete Dust	Panel	GF F 4	**0.109**	**0.78**
12	12	Concrete Dust	Panel	GF F 3	**0.095**	**0.68**
13	13	Concrete Dust	Panel	GF LH G 1	**0.100**	**0.71**
14	14	Concrete Dust	Panel	GF LH G 2	**0.100**	**0.71**
15	15	Concrete Dust	Panel	GF LH G 4	**0.904**	**6.46**
16	16	Concrete Dust	Panel	GF LH G 5	**0.106**	**0.76**

14786/MDA/001

NCA sample ref	MDA sample ref	Sample type	Component	Location	**Chloride Ion Content (% by mass of concrete)**	**Chloride Ion Content (% by mass of cement))**
Reema Flats – Edinburgh House						
17	17	Concrete Dust	Dividing Panel	GF LH G 1	**0.244**	**1.74**
18	18	Concrete Dust	Dividing Panel	FF LH G 1	**0.198**	**1.41**
19	19	Concrete Dust	Dividing Panel	GF RH G 1	**0.306**	**2.19**
20	20	Concrete Dust	Dividing Panel	FF RH G 1	**0.328**	**2.34**
Reema Flats – Lewes House						
21	1	Concrete Dust	Column	GF F 2	**0.009**	**0.06**
22	2	Concrete Dust	Column	GF F 5	**0.007**	**0.05**
23	3	Concrete Dust	Column	GF RH G 2	**0.005**	**0.03**
24	4	Concrete Dust	Column	GF RH G 8	**0.007**	**0.05**
25	5	Concrete Dust	Ringbeam	GF F 1	**0.169**	**1.21**
26	6	Concrete Dust	Ringbeam	GF F 2	**0.213**	**1.52**
27	7	Concrete Dust	Ringbeam	GF RH G 5	**0.102**	**0.73**
28	8	Concrete Dust	Ringbeam	GF RH G 4	**0.208**	**1.49**
29	9	Concrete Dust	Panel	GF F 1	**0.119**	**0.85**
30	10	Concrete Dust	Panel	GF F 2	**0.089**	**0.64**
31	11	Concrete Dust	Panel	GF F 3	**0.142**	**1.02**
32	12	Concrete Dust	Panel	GF F 4	**0.175**	**1.25**
33	13	Concrete Dust	Panel	GF RH G 1	**0.103**	**0.74**
34	14	Concrete Dust	Panel	GF RH G 2	**0.153**	**1.09**
35	15	Concrete Dust	Panel	GF RH G 3	**0.157**	**1.12**
36	16	Concrete Dust	Panel	GF RH G 4	**0.089**	**0.63**

14786/MDA/001

NCA sample ref	MDA sample ref	Sample type	Component	Location	**Chloride Ion Content (% by mass of concrete)**	**Chloride Ion Content (% by mass of cement))**
Reema Flats – Lewes House						
37	17	Concrete Dust	Dividing Panel	GF RH G 1	**0.197**	**1.40**
38	18	Concrete Dust	Dividing Panel	FF RH G 1	**0.202**	**1.44**
39	19	Concrete Dust	Dividing Panel	GF R 1	**0.122**	**0.87**
40	20	Concrete Dust	Dividing Panel	FF R 1	**0.153**	**1.09**

NOTES:
1. Testing was in accordance with BS 1881: Part 124: 1988 Clause 10.2 using potentiometric titration.
2. A cement content of 14% was used in the calculation of chloride ion content.
3. Samples received were smaller than required by Clause 3.2 BS 1881 : Part 124 : 1988.
4. Samples were not passed over the 150micron BS Test Sieve before testing.
5. Quality control samples are tested with each batch of samples.

.....

[redacted]

Manager – Data Logistics
Nicholls Colton Analytical

Michael Dyson Associates Ltd
West House
Meltham Road
Honley
Holmfirth
West Yorkshire
HD9 6LB

Nicholls Colton Analytical
7-11 Harding Street, Leicester, LE1 4DH
Tel: 0116 253 6333. Fax: 0116 251 4709
e-mail: testing@nicholls-colton.co.uk
website: www.nicholls-colton.co.uk

0320

TEST REPORT

BS1881 CEMENT CONTENT

7551 – RPS Planning & Development (Milton Keynes)

Report no. 14746/MDA/002	
Order reference: 6157	Date of testing: 09.2013
Date of receipt: 09.09.2013	Date of issue: 19.09.2013

NCA sample reference:	Client sample identification	Sample type	Cement content by SiO_2 content (% m/m)	Cement content by CaO content (% m/m)	**Preferred Cement Content (% m/m)**
13-20820	Cement 1 In situ components, Avon House and Chorwell House	Concrete Dust Amalgamation	23.6	41.2	**23.6**
13-20821	Cement 2 PRC components, Avon House and Chorwell House	Concrete Dust Amalgamation	20.5	48.2	**20.5**
13-20822	Cement 3 In situ components, Doune House	Concrete Dust Amalgamation	21.5	35.1	**21.5**
13-20823	Cement 4 PRC components, Doune House	Concrete Dust Amalgamation	19.3	25.6	**19.3**
13-20824	Cement 5 In situ components, Argyll House, Lanark House, Fife House, Pembrooke House and Rutland House	Concrete Dust Amalgamation	22.7	23.3	**23.0**
13-20825	Cement 6 PRC components, Argyll House, Lanark House, Fife House, Pembrooke House and Rutland	Concrete Dust Amalgamation	22.1	14.0	**14.0**

NOTES:
1. Testing was in accordance with BS 1881: Part 124: 1988 Clause 5 by ICP.
2. Cement content has been calculated assuming the presence in the concrete of Ordinary Portland Cement, containing 20.2% and 64.5% by mass of soluble silica and calcium oxide respectively.
3. Samples of the original constituents of the mix were not submitted.
4. Samples received were smaller than required by Clause 3.2, BS 1881: Part 124: 1988.
5. Quality control samples are tested with each batch of samples.
6. Duplicate tests are carried out.

[redacted].....
[redacted]
Manager - Data Logistics
Nicholls Colton Analytical

Michael Dyson Associates
West House
Meltham Road
Honley
Holmfirth
West Yorkshire
HD9 6LB

Nicholls Colton Analytical
7-11 Harding Street, Leicester, LE1 4DH
Tel: 0116 253 6333. Fax: 0116 251 4709
e-mail: testing@nicholls-colton.co.uk
website: www.nicholls-colton.co.uk

0320

TEST REPORT

BS1881 CEMENT CONTENT

7551 RPS Planning and Development

Report no. 14786/MDA/002	
Order reference: 6163	Date of testing: 17/09/2013 to 18/09/2013
Date of receipt: 13/09/2013	Date of issue: 26/09/2013

NCA sample reference:	Client sample identification	Grid point/ Test area:	Sample type	Cement content by SiO_2 content (% m/m)	Cement content by CaO content (% m/m)	**Preferred Cement Content (% m/m)**
13-21013	CEMENT 1	Amalgamation (Column and Ringbeam)	Concrete dust Amalgamation	29.8	37.1	**29.8**
13-21014	CEMENT 2	Amalgamation (Dividing Panel and Panel)	Concrete dust Amalgamation	29.7	31.9	**29.7**

NOTES:
1. Testing was in accordance with BS 1881: Part 124: 1988 Clause 5 by ICP.
2. Cement content has been calculated assuming the presence in the concrete of Ordinary Portland Cement, containing 20.2% and 64.5% by mass of soluble silica and calcium oxide respectively.
3. Samples of the original constituents of the mix were not submitted.
4. Samples received were smaller than required by Clause 3.2, BS 1881: Part 124: 1988.
5. Quality control samples are tested with each batch of samples.
6. Duplicate tests are carried out.

[redacted]
.....
[redacted]
Data Logistics Manager
Nicholls Colton Analytical

Michael Dyson Associates
West House
Meltham Road
Honley
Holmfirth
West Yorkshire
HD9 6LB

F.1 Elevations of Surveyed Flats Blocks

Reema Flats Blocks

Photograph 1:
Argyll House, Front Elevation.

Photograph 2:
Argyll House, Right Hand Gable Elevation.

Photograph 3:
Argyll House, Left Hand Gable Elevation.

Photograph 4:
Avon House Flats 66-76, Front Elevation.

© Michael Dyson Associates Ltd.

F.1 Elevations of Surveyed Flats Blocks Continued

Reema Flats Blocks Continued

Photograph 5:
Avon House Flats 66-76, Rear Elevation.

Photograph 6:
Avon House Flats 78-100, Front Elevation.

Photograph 7:
Avon House Flats 78-100, Rear Elevation.

Photograph 8:
Cherwell House, Front Elevation**.**

© Michael Dyson Associates Ltd.

F.1 Elevations of Surveyed Flats Blocks Continued

Reema Flats Blocks Continued

Photograph 9:
Cherwell House, Rear and Left Hand Gable Elevations.

Photograph 10:
Cherwell House, Rear and Right Hand Gable Elevations.

Photograph 11:
Doune House, Front Elevation.

Photograph 12:
Doune House, Left Hand Gable Elevation.

© Michael Dyson Associates Ltd.

F.1 Elevations of Surveyed Flats Blocks Continued

Reema Flats Blocks Continued

Photograph 13:
Doune House, Right Hand Gable Elevation.

Photograph 14:
Edinburgh House, Front Elevation.

Photograph 15:
Edinburgh House, Left Hand Gable Elevation.

Photograph 16:
Edinburgh House, Right Hand Gable Elevation.

© Michael Dyson Associates Ltd.

F.1 Elevations of Surveyed Flats Blocks Continued

Reema Flats Blocks Continued

Photograph 17:
Fife House, Front Elevation.

Photograph 18:
Fife House, Left Hand Gable Elevation.

Photograph 19:
Fife House, Right Hand Gable Elevation**.**

Photograph 20:
Lanark House, Front Elevation.

© Michael Dyson Associates Ltd.

F.1 Elevations of Surveyed Flats Blocks Continued

Reema Flats Blocks Continued

Photograph 21:
Lanark House, Right Hand Gable Elevation.

Photograph 22:
Lanark House, Left Hand Gable Elevation.

Photograph 23:
Lewes House, Front Elevation.

Photograph 24:
Lewes House, Left Hand Gable Elevation.

© Michael Dyson Associates Ltd.

F.1 Elevations of Surveyed Flats Blocks Continued

Reema Flats Blocks Continued

Photograph 25:
Lewes House, Right Hand Gable Elevation.

Photograph 26:
Pembroke House, Front Elevation.

Photograph 27:
Pembroke House, Left Hand Gable Elevation.

Photograph 28:
Pembroke House, Right Hand Gable Elevation.

© Michael Dyson Associates Ltd.

F.1 Elevations of Surveyed Flats Blocks Continued

Reema Flats Blocks Continued

Photograph 29:
Rutland House, Front Elevation.

Photograph 30:
Rutland House, Right Hand Gable Elevation.

Photograph 31:
Rutland House, Left Hand Gable Elevation.

© Michael Dyson Associates Ltd.

F.2 General Observations

External Defects

Photograph 1:
Defect A – Cracking to PRC panel.

Photograph 2:
Defect B – Spalling to PRC panel.

Photograph 3:
Defect Type C – Staining to PRC panel.

Photograph 4:
Defect Type D – Mortar missing from panel joints.

© Michael Dyson Associates Ltd.

F.2 General Observations Continued

External Defects Continued

Photograph 5:
Defect Type E – Cracking to PRC window reveal.

Photograph 6:
Defect Type F – Spalling to PRC window reveal.

Photograph 7:
Defect Type G – Cracking to PRC door canopy.

Photograph 8:
Defect Type H – Spalling to PRC door canopy.

© Michael Dyson Associates Ltd.

F.2 General Observations Continued

External Defects Continued

Photograph 9:
Defect I - Cracking to concrete slab edge.

Photograph 10:
Defect J – Spalling to concrete slab edge.

Photograph 11:
Defect K – Bridging of DPC.

Photograph 12:
Defect M – Damage to PRC panels.

© Michael Dyson Associates Ltd.

F.2 General Observations Continued

External Defects Continued

Photograph 13:
Defect N – Cracking to PRC door reveal.

Photograph 14:
Defect O – Spalling to PRC door reveal.

Photograph 15:
Defect Q – Rust spots to PRC panels.

Photograph 16:
Defect R – Patch repairs to PRC panels.

© Michael Dyson Associates Ltd.

F.2 General Observations Continued

External Defects Continued

Photograph 17:
Defect S – Damaged fascia and soffits.

Photograph 18:
Defect T – Foliage growth to external elevations observed.

Internal Communal Area Defects

Photograph 19:
Defect 1 – Cracking to panel joint.

Photograph 20:
Defect 2 – Cracking to PRC panel.

© Michael Dyson Associates Ltd.

F.2 General Observations Continued

Internal Communal Area Defects Continued

Photograph 21:
Defect 3 – Cracking to window surround.

Photograph 22:
Defect 4 – Damaged PRC panel.

Photograph 23:
Defect 5 – Cracking to ceiling.

Photograph 24:
Defect 6 - Missing mortar from panel joints.

© Michael Dyson Associates Ltd.

F.2 General Observations Continued

Internal Communal Area Defects Continued

Photograph 25:
Defect 7 – Cracking to lintel above door.

Photograph 26:
Defect 8 - Rust spots to PRC panel.

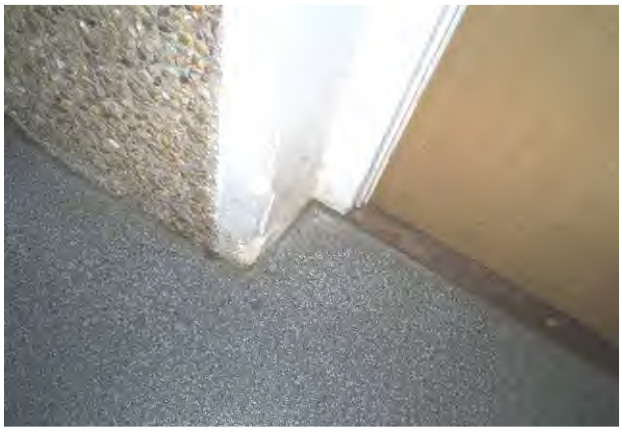

Photograph 27:
Defect 9 – Cracking to door surround.

Photograph 28:
Defect 10 – Cracking to underside of concrete floor slab.

© Michael Dyson Associates Ltd.

F.2 General Observations Continued

Invasive Investigation

Photograph 29:
Typical roof construction showing traditional sawn timber rafters and purlins to be in satisfactory condition.

Photograph 30:
Damaged sarking felt observed to roof covering.

Photograph 31:
Un-supported joint observed showing sagging of purlin.

Photograph 32:
Poor levels / areas of roof loft insulation missing.

© Michael Dyson Associates Ltd.

F.2 General Observations Continued

Invasive Investigation Continued

Photograph 33:
Gaps in party wall around purlins creating a defective party wall fire stop between flats.

Photograph 34:
Missing fire doors in roof void party wall between flats and communal space creating a defective fire stop.

Photograph 35:
Spring loaded fire doors in roof void party wall creating an effective fire stop between flats and communal roof void.

Photograph 36:
Carbonation test to PRC panel showing steel reinforcement to be severely corroded and carbonation to have reached the depth of steel reinforcement. Note low cover to steel reinforcement bars.

© Michael Dyson Associates Ltd.

F.2 General Observations Continued

Invasive Investigation Continued

Photograph 37:
Carbonation test showing PRC panel to be fully carbonated beyond the depth of steel reinforcement. Steel reinforcement noted to be corroding.

Photograph 38:
Carbonation test showing PRC panel to be fully carbonated beyond the depth of steel reinforcement. Steel reinforcement noted to be corroding.

Photograph 39:
Carbonation test showing minimal carbonation present to PRC panel.

Photograph 40:
Carbonation test showing minimal carbonation present to PRC panel and column..

© Michael Dyson Associates Ltd.

RPS PLANNING & DEVELOPMENT			
Elevation & Plan Drawings			
External Defects Log			
House Type	4 Storey Reema Flats Blocks	**Site**	Bletchley
Defect	**Description of Defect**		
A	Cracking to PRC Panel		
B	Spalling to PRC Panel		
C	Staining to PRC Panel		
D	Mortar Missing from Panel Joints		
E	Cracking to PRC Window Reveal		
F	Spalling to PRC Window Reveal		
G	Cracking to Door Canopy		
H	Spalling to Door Canopy		
I	Cracking to Concrete Slab Edge		
J	Spalling to Concrete Slab Edge		
K	Bridging of DPC		
L	Blocked Gutters		
M	Damaged PRC Panel		
N	Cracking to PRC Door Reveal		
O	Spalling to PRC Door Reveal		
P	Moss Growth to Roof Covering		
Q	Rust Spots to PRC Panel		
R	Patch Repairs to PRC Panels		
S	Damaged Fascias and Soffits		
T	Foliage Growth		

Table G.1

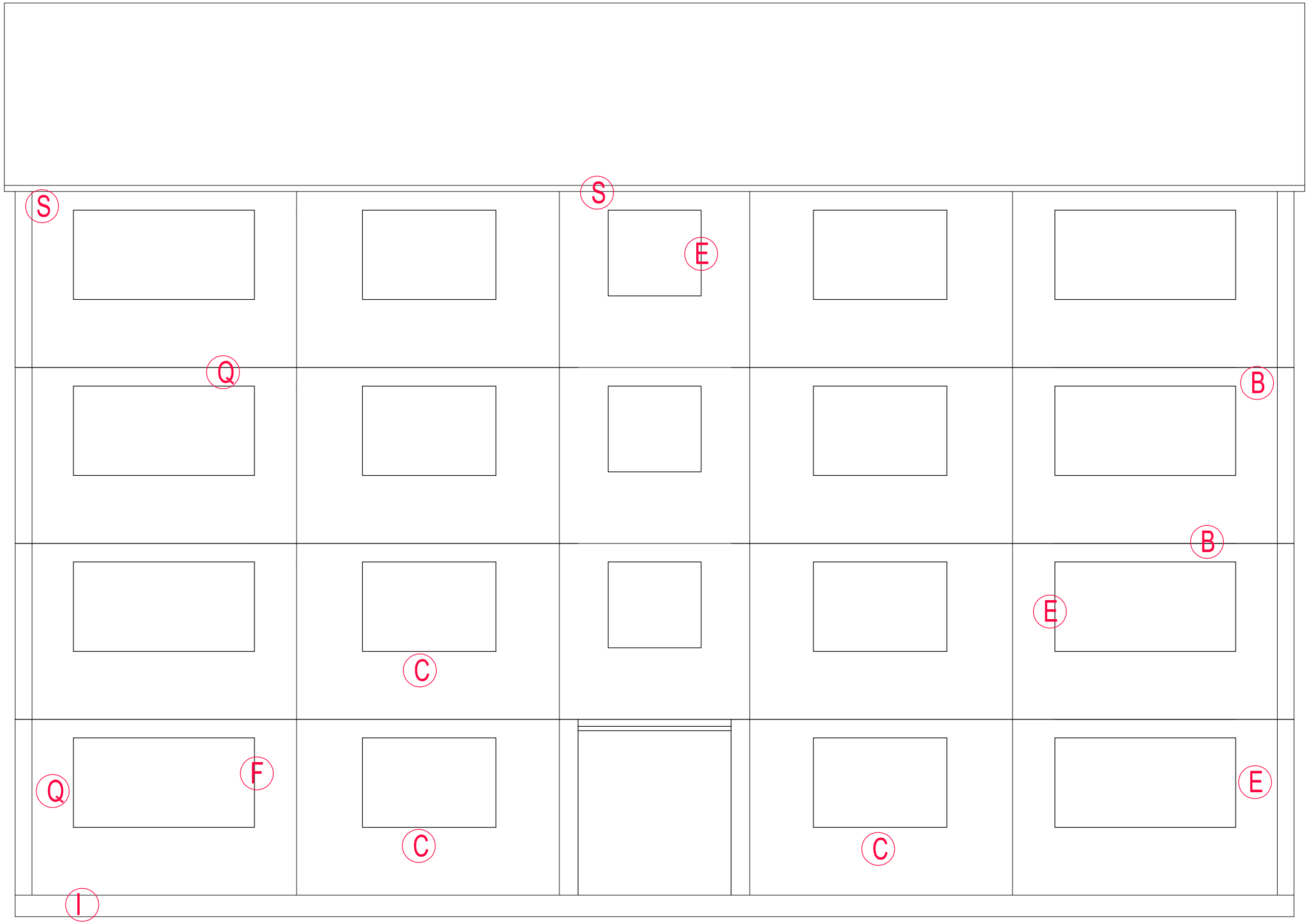

FRONT ELEVATION
(SCALE 1:30)

10 30 50
20 40

Do not scale from this drawing.
All dimensions must be checked on site by the Contractor prior to the commencement of any fabrication or building works.
Where applicable, dimensions and details are to be read in conjunction with specialist consultants' drawings and/or other specifications; any disparity is to be brought to the attention of Michael Dyson Associates Limited prior to the commencement of any fabrication or building works.
©This drawing is the property and copyright of Michael Dyson Associates Limited; It shall not be copied to any other party without the express written consent of an authorised director of Michael Dyson Associates Limited.

NOTES

REV	DATE	AMENDMENTS	BY	APR'D

West House, Meltham Road, Honley,
Huddersfield HD9 6LB
t. 01484 666888 f. 01484 664186
w. www.mdyson.co.uk

CLIENT :
RPS PLANNING & DEVELOPMENT

PROJECT :
STRUCTURAL SURVEY FOR 4NR REEMA FLATS BLOCKS IN MILTON KEYNES

TITLE :
TYPICAL EXISTING FRONT ELEVATION
ARGYLL HOUSE

DRAWN BY :	SM	APPROVED BY :	
DATE :	25/06/2013	DATE :	
SCALE :	1:30	ORIGINAL DRAWING SIZE 841 x 594 - A1	
DRAWING No :	1100-(REEMA)-7551	REV.	

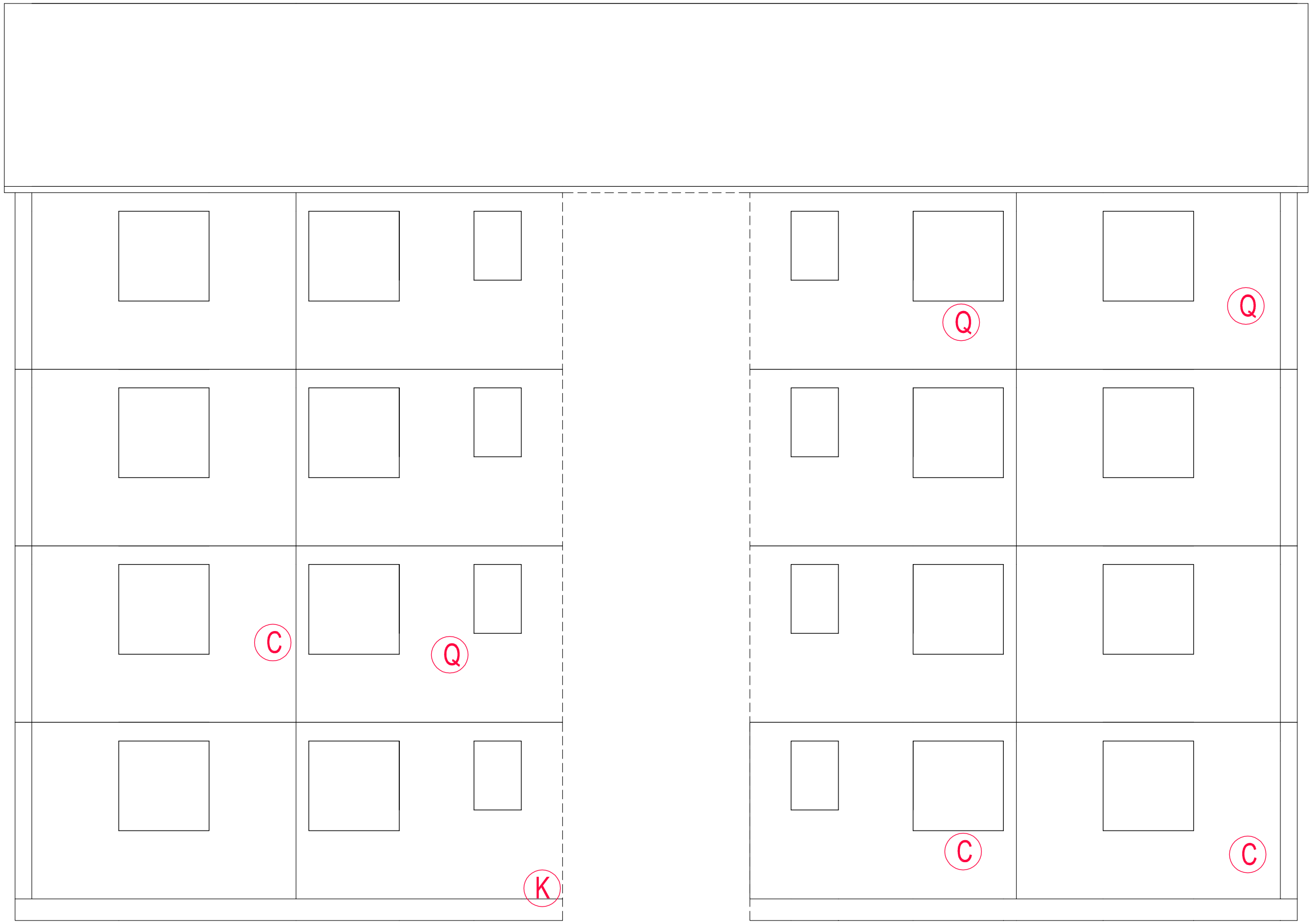

REAR ELEVATION
(SCALE 1:30)

10 30 50
20 40

Do not scale from this drawing.
All dimensions must be checked on site by the Contractor prior to the commencement of any fabrication or building works.
Where applicable, dimensions and details are to be read in conjunction with specialist consultants' drawings and/or other specifications; any disparity is to be brought to the attention of Michael Dyson Associates Limited prior to the commencement of any fabrication or building works.
©This drawing is the property and copyright of Michael Dyson Associates Limited; It shall not be copied to any other party without the express written consent of an authorised director of Michael Dyson Associates Limited.

NOTES

REV	DATE	AMENDMENTS	BY	APR'D

West House, Meltham Road, Honley,
Huddersfield HD9 6LB
t. 01484 666888 f. 01484 664186
w. www.mdyson.co.uk

CLIENT :
RPS PLANNING & DEVELOPMENT

PROJECT :
STRUCTURAL SURVEY FOR 4NR REEMA FLATS BLOCKS IN MILTON KEYNES

TITLE :
TYPICAL EXISTING REAR ELEVATION
ARGYLL HOUSE

DRAWN BY :	SM	APPROVED BY :	
DATE :	25/06/2013	DATE :	
SCALE :	1:30	ORIGINAL DRAWING SIZE 841 x 594 - A1	
DRAWING No :	1102-(REEMA)-7551	REV.	

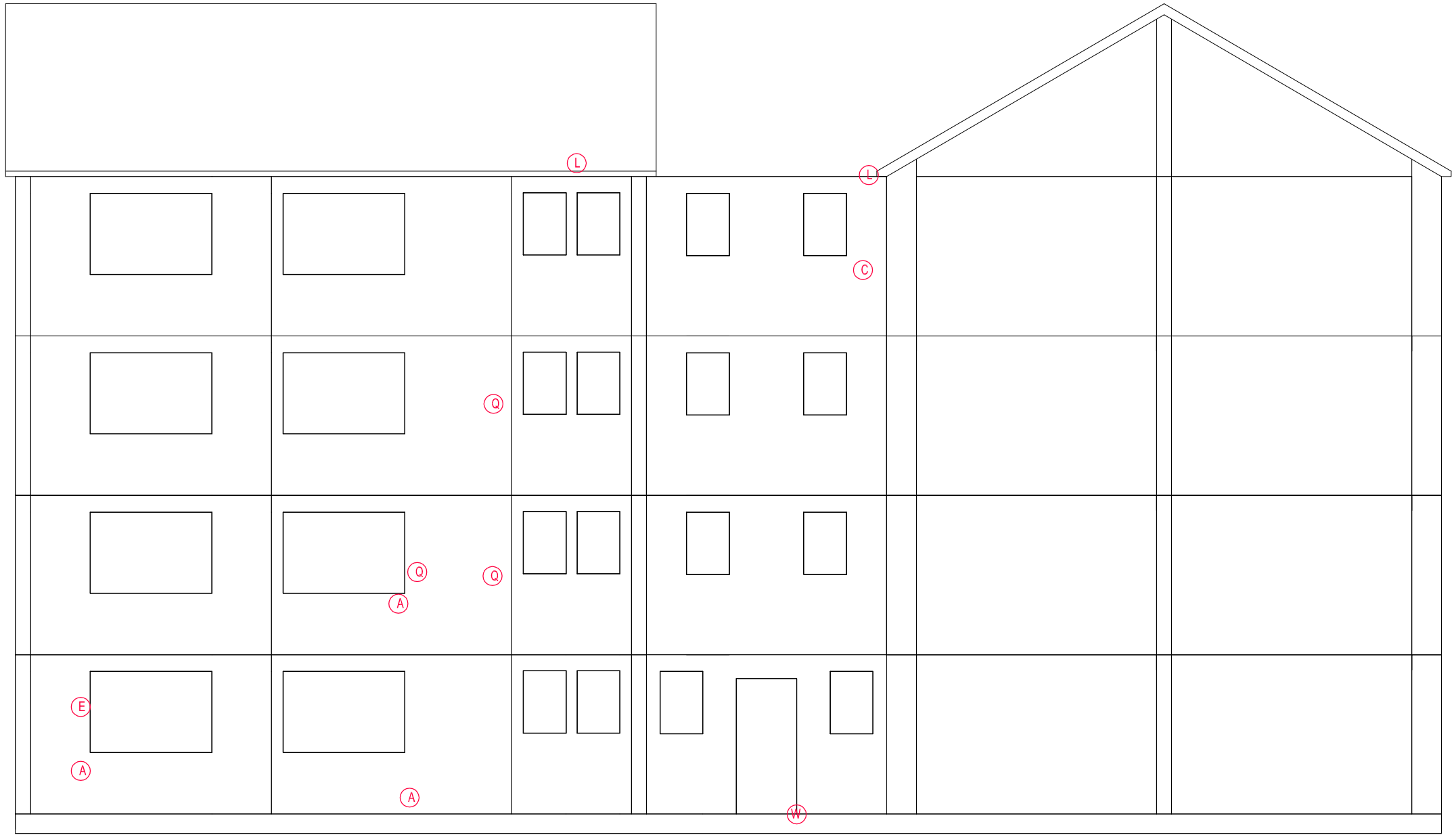

LH GABLE ELEVATION
(SCALE 1:40)

10 30 50
20 40

Do not scale from this drawing.
All dimensions must be checked on site by the Contractor prior to the commencement of any fabrication or building works.
Where applicable, dimensions and details are to be read in conjunction with specialist consultants' drawings and/or other specifications; any disparity is to be brought to the attention of Michael Dyson Associates Limited prior to the commencement of any fabrication or building works.
©This drawing is the property and copyright of Michael Dyson Associates Limited; It shall not be copied to any other party without the express written consent of an authorised director of Michael Dyson Associates Limited.

NOTES

REV	DATE	AMENDMENTS	BY	APR'D

West House, Meltham Road, Honley,
Huddersfield HD9 6LB
t. 01484 666888 f. 01484 664186
w. www.mdyson.co.uk

CLIENT :

RPS PLANNING & DEVELOPMENT

PROJECT :

STRUCTURAL SURVEY FOR 4NR REEMA FLATS BLOCKS IN MILTON KEYNES

TITLE :

TYPICAL EXISTING LH GABLE ELEVATION
ARGYLL HOUSE

DRAWN BY :	SM	APPROVED BY :	
DATE :	25/06/2013	DATE :	
SCALE :	1:40	ORIGINAL DRAWING SIZE 841 x 594 - A1	
DRAWING No :	1103-(REEMA)-7551	REV.	

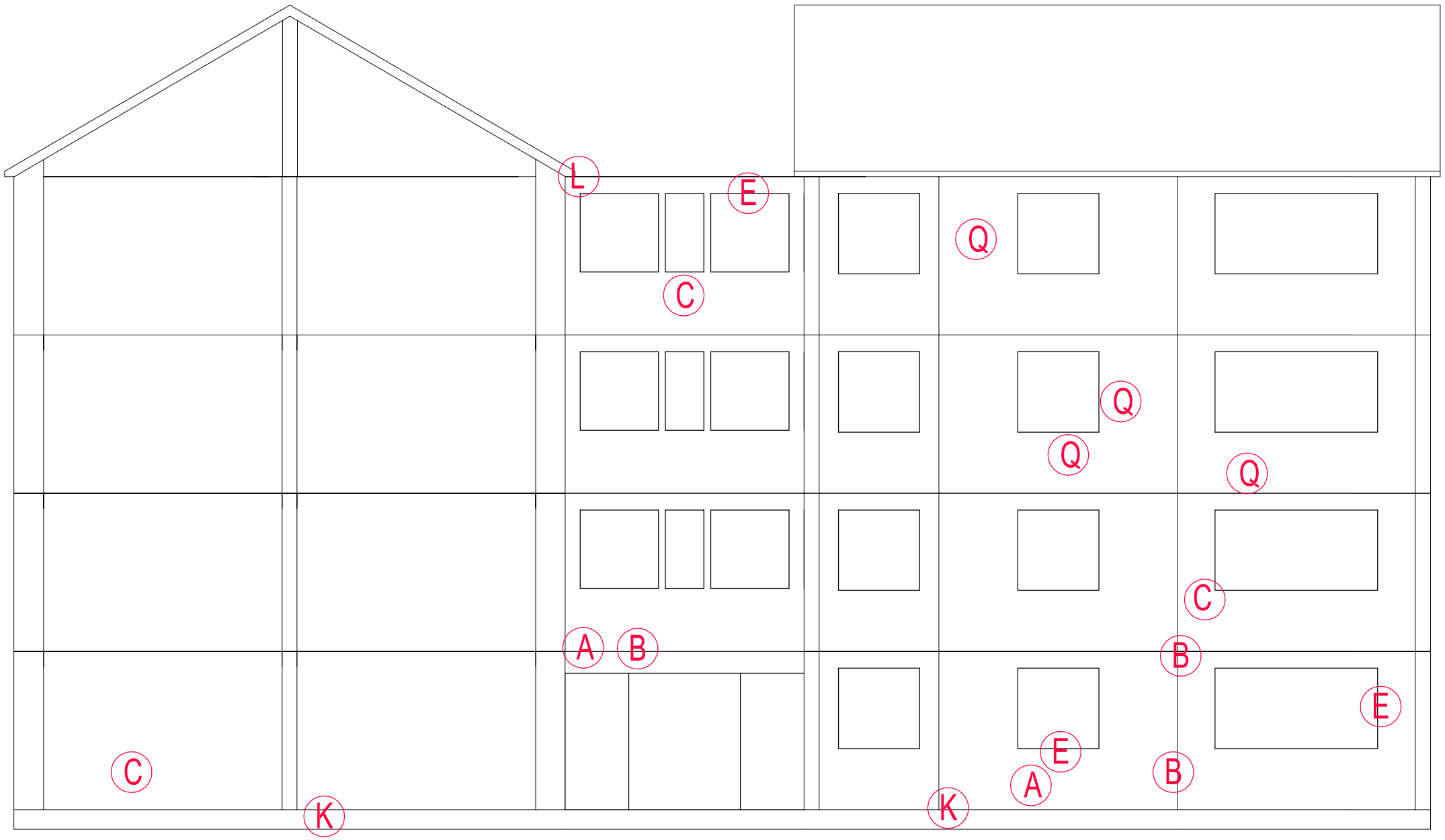

RH GABLE ELEVATION
(SCALE 1:40)

10 30 50
20 40

Do not scale from this drawing.
All dimensions must be checked on site by the Contractor prior to the commencement of any fabrication or building works.
Where applicable, dimensions and details are to be read in conjunction with specialist consultants' drawings and/or other specifications; any disparity is to be brought to the attention of Michael Dyson Associates Limited prior to the commencement of any fabrication or building works.
©This drawing is the property and copyright of Michael Dyson Associates Limited; It shall not be copied to any other party without the express written consent of an authorised director of Michael Dyson Associates Limited.

NOTES

REV	DATE	AMENDMENTS	BY	APR'D

West House, Meltham Road, Honley,
Huddersfield HD9 6LB
t. 01484 666888 f. 01484 664186
w. www.mdyson.co.uk

CLIENT :
RPS PLANNING & DEVELOPMENT

PROJECT :
STRUCTURAL SURVEY FOR 4NR REEMA FLATS BLOCKS IN MILTON KEYNES

TITLE :
TYPICAL EXISTING RH GABLE ELEVATION ARGYLL HOUSE

DRAWN BY :	SM	APPROVED BY :	
DATE :	25/06/2013	DATE :	
SCALE :	1:40	ORIGINAL DRAWING SIZE 841 x 594 - A1	
DRAWING No :	1104-(REEMA)-7551	REV.	

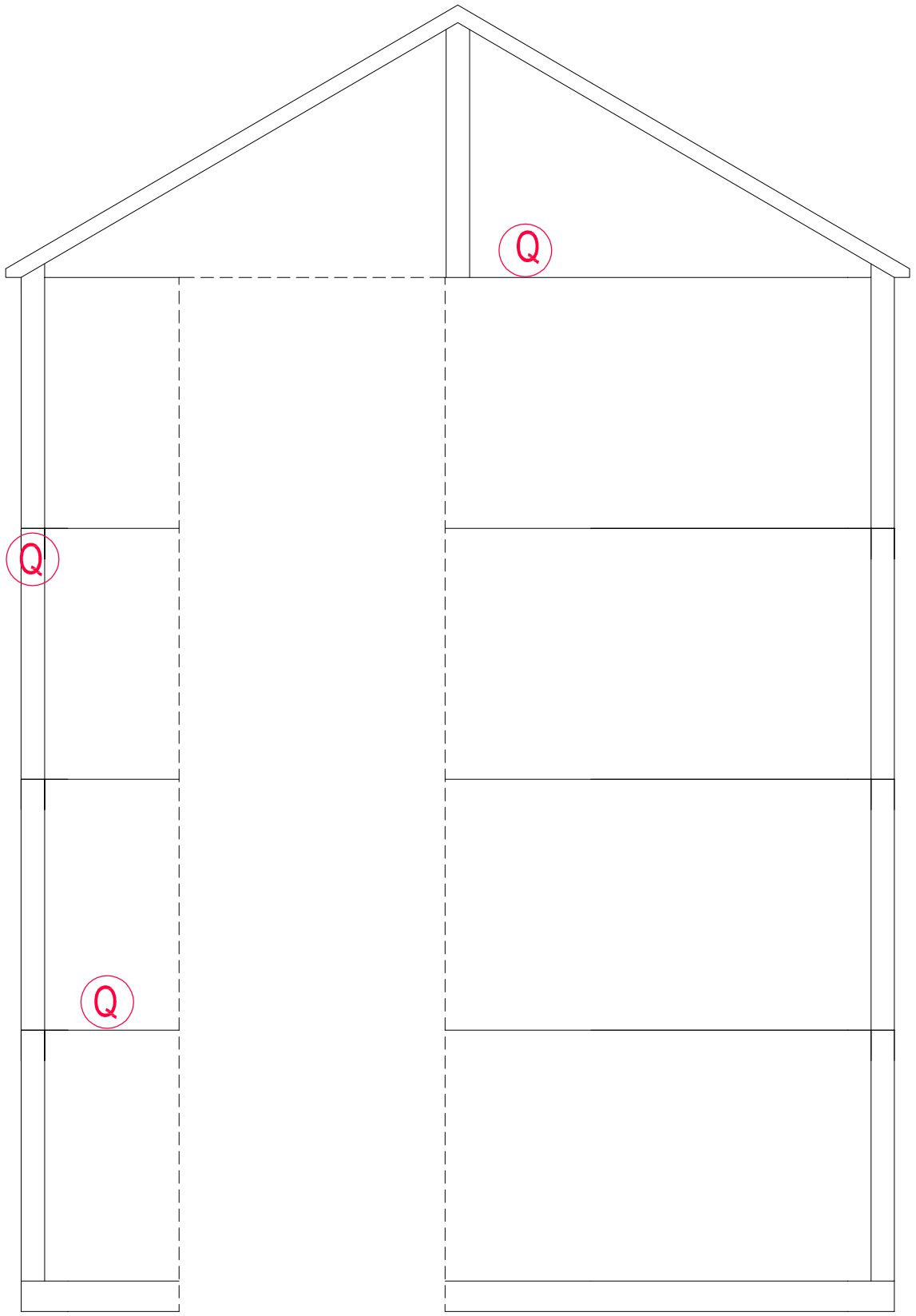

LINK GABLE ELEVATION
(SCALE 1:30)

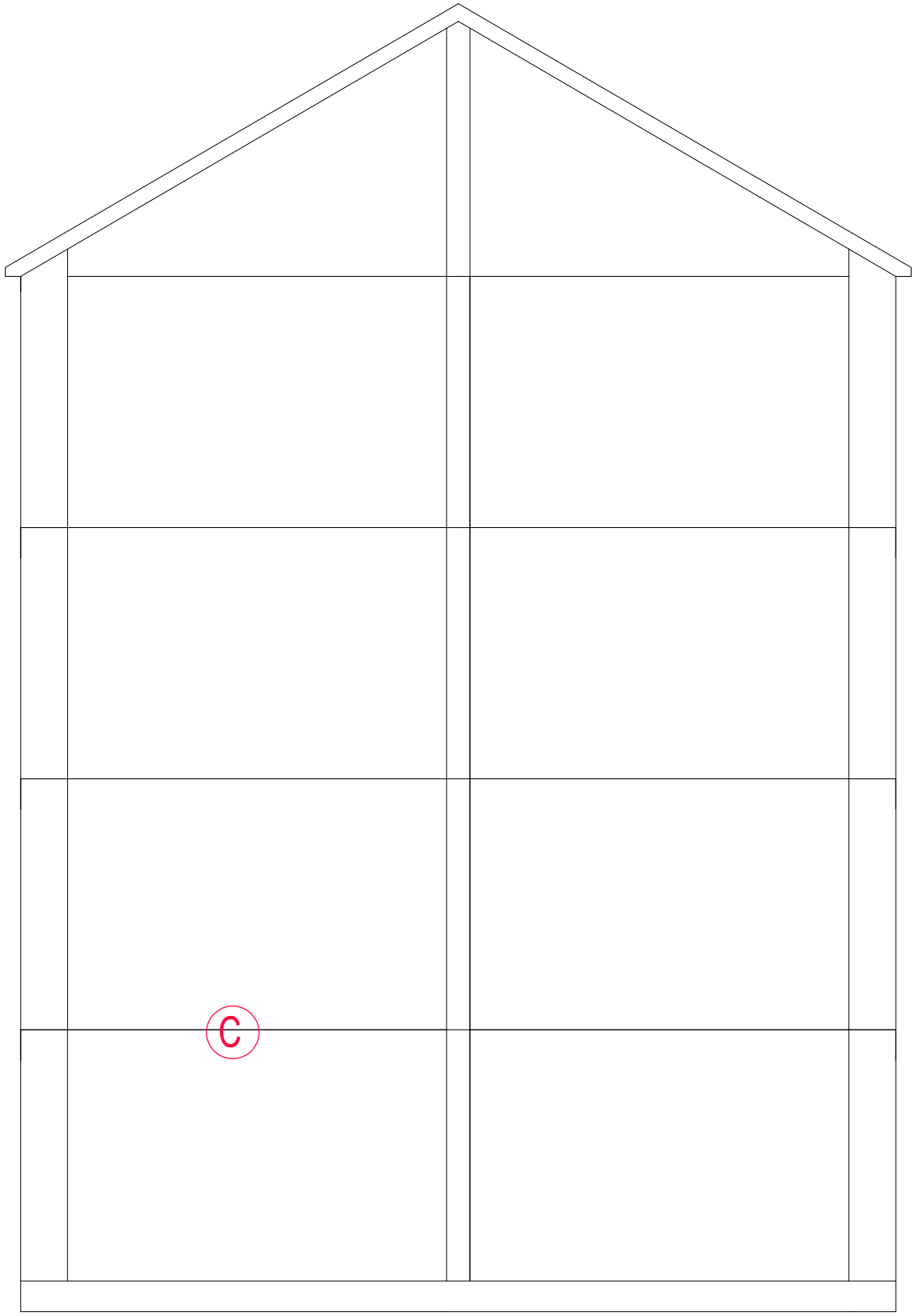

REAR LINK GABLE ELEVATION
(SCALE 1:30)

10 30 50
20 40

Do not scale from this drawing.
All dimensions must be checked on site by the Contractor prior to the commencement of any fabrication or building works.
Where applicable, dimensions and details are to be read in conjunction with specialist consultants' drawings and/or other specifications; any disparity is to be brought to the attention of Michael Dyson Associates Limited prior to the commencement of any fabrication or building works.
©This drawing is the property and copyright of Michael Dyson Associates Limited; It shall not be copied to any other party without the express written consent of an authorised director of Michael Dyson Associates Limited.

NOTES

REV	DATE	AMENDMENTS	BY	APR'D

West House, Meltham Road, Honley,
Huddersfield HD9 6LB
t. 01484 666888 f. 01484 664186
w. www.mdyson.co.uk

CLIENT :

RPS PLANNING & DEVELOPMENT

PROJECT :

STRUCTURAL SURVEY FOR 4NR REEMA FLATS BLOCKS IN MILTON KEYNES

TITLE :

TYPICAL EXISTING LINK GABLE ELEVATIONS ARGYLL HOUSE

DRAWN BY :	SM	APPROVED BY :	
DATE :	25/06/2013	DATE :	
SCALE :	1:30	ORIGINAL DRAWING SIZE 841 x 594 - A1	
DRAWING No :	1105-(REEMA)-7551	REV.	

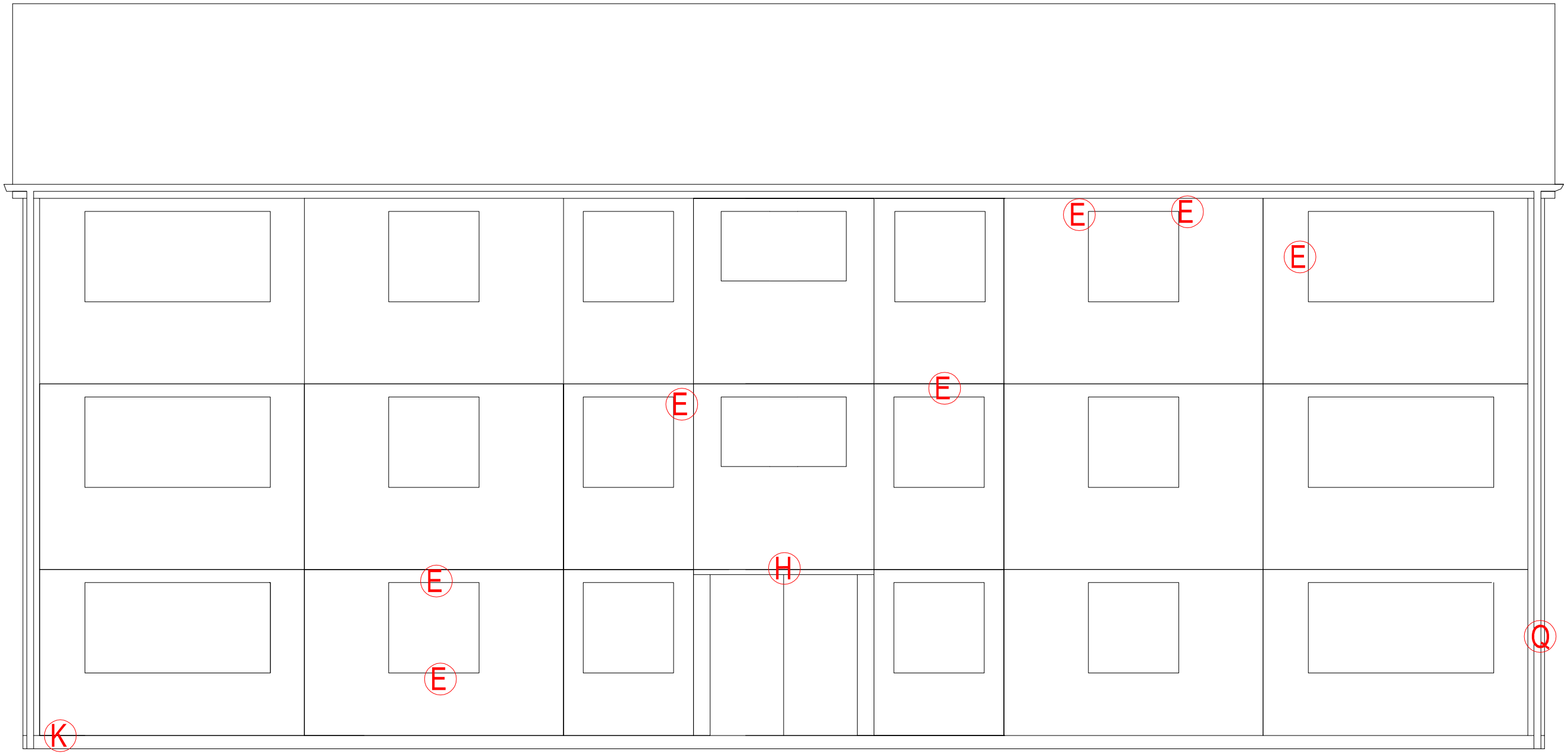

FRONT ELEVATION
(SCALE 1:30)

10 30 50
20 40

Do not scale from this drawing.
All dimensions must be checked on site by the Contractor prior to the commencement of any fabrication or building works.
Where applicable, dimensions and details are to be read in conjunction with specialist consultants' drawings and/or other specifications; any disparity is to be brought to the attention of Michael Dyson Associates Limited prior to the commencement of any fabrication or building works.
©This drawing is the property and copyright of Michael Dyson Associates Limited; It shall not be copied to any other party without the express written consent of an authorised director of Michael Dyson Associates Limited.

NOTES

REV	DATE	AMENDMENTS	BY	APR'D

West House, Meltham Road, Honley,
Huddersfield HD9 6LB
t. 01484 666888 f. 01484 664186
w. www.mdyson.co.uk

CLIENT :

RPS PLANNING & DEVELOPMENT

PROJECT :

STRUCTURAL SURVEY FOR 4NR REEMA FLATS BLOCKS IN MILTON KEYNES

TITLE :

TYPICAL EXISTING FRONT ELEVATION
AVON HOUSE 66-77

DRAWN BY :	NG	APPROVED BY :	
DATE :	23/08/2013	DATE :	
SCALE :	1:30	ORIGINAL DRAWING SIZE 841 x 594 - A1	
DRAWING No :	701-(REEMA)-7551	REV.	

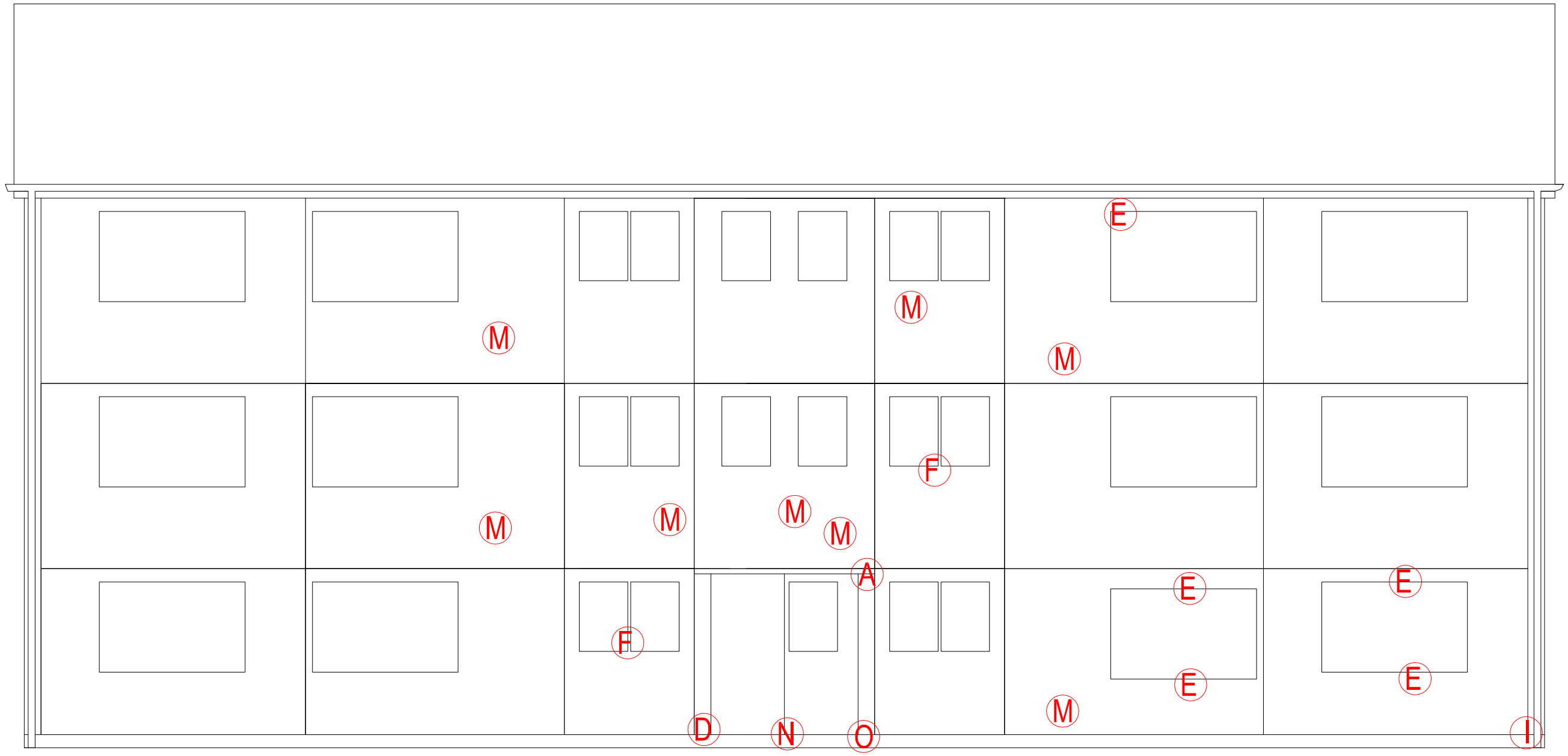

REAR ELEVATION
(SCALE 1:30)

10 30 50
20 40

Do not scale from this drawing.
All dimensions must be checked on site by the Contractor prior to the commencement of any fabrication or building works.
Where applicable, dimensions and details are to be read in conjunction with specialist consultants' drawings and/or other specifications; any disparity is to be brought to the attention of Michael Dyson Associates Limited prior to the commencement of any fabrication or building works.
©This drawing is the property and copyright of Michael Dyson Associates Limited; It shall not be copied to any other party without the express written consent of an authorised director of Michael Dyson Associates Limited.

NOTES

REV	DATE	AMENDMENTS	BY	APR'D

West House, Meltham Road, Honley,
Huddersfield HD9 6LB
t. 01484 666888 f. 01484 664186
w. www.mdyson.co.uk

CLIENT :

RPS PLANNING & DEVELOPMENT

PROJECT :

STRUCTURAL SURVEY FOR 4NR REEMA FLATS BLOCKS IN MILTON KEYNES

TITLE :

TYPICAL EXISTING REAR ELEVATIONS
AVON HOUSE 66 - 77

DRAWN BY :	SM	APPROVED BY :	
DATE :	25/06/2013	DATE :	
SCALE :	1:30	ORIGINAL DRAWING SIZE 841 x 594 - A1	
DRAWING No :	702-(REEMA)-7551	REV.	

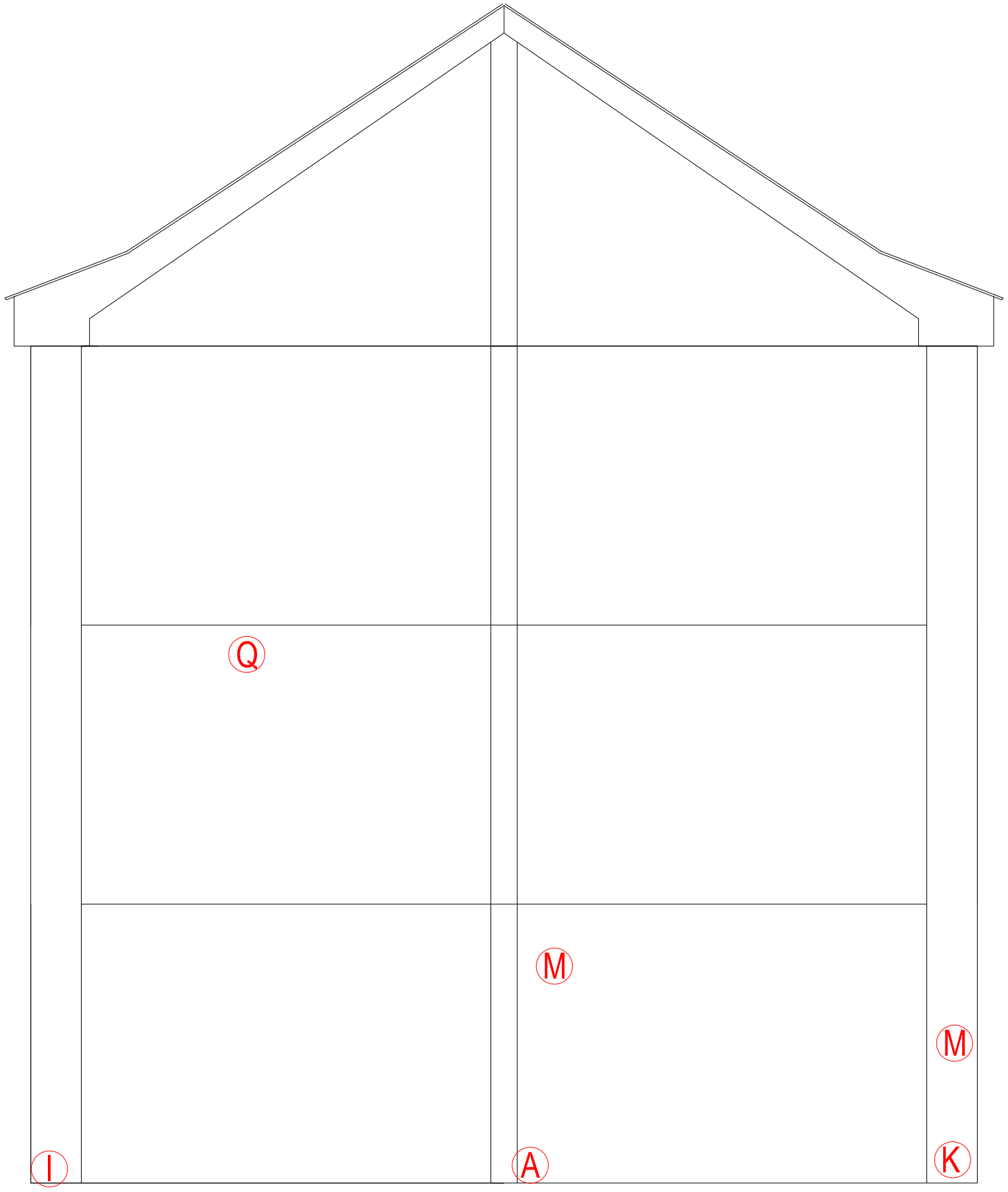

LH GABLE ELEVATION
(SCALE 1:30)

10 30 50
20 40

Do not scale from this drawing.
All dimensions must be checked on site by the Contractor prior to the commencement of any fabrication or building works.
Where applicable, dimensions and details are to be read in conjunction with specialist consultants' drawings and/or other specifications; any disparity is to be brought to the attention of Michael Dyson Associates Limited prior to the commencement of any fabrication or building works.
©This drawing is the property and copyright of Michael Dyson Associates Limited; It shall not be copied to any other party without the express written consent of an authorised director of Michael Dyson Associates Limited.

NOTES

REV	DATE	AMENDMENTS	BY	APR'D

West House, Meltham Road, Honley,
Huddersfield HD9 6LB
t. 01484 666888 f. 01484 664186
w. www.mdyson.co.uk

CLIENT :

RPS PLANNING & DEVELOPMENT

PROJECT :

STRUCTURAL SURVEY FOR 4NR REEMA FLATS BLOCKS IN MILTON KEYNES

TITLE :

TYPICAL EXISTING LH GABLE ELEVATION
AVON HOUSE 66 - 76

DRAWN BY :	NG	APPROVED BY :	
DATE :	23/08/2013	DATE :	
SCALE :	1:30	ORIGINAL DRAWING SIZE 841 x 594 - A1	
DRAWING No :	703-(REEMA)-7551	REV.	

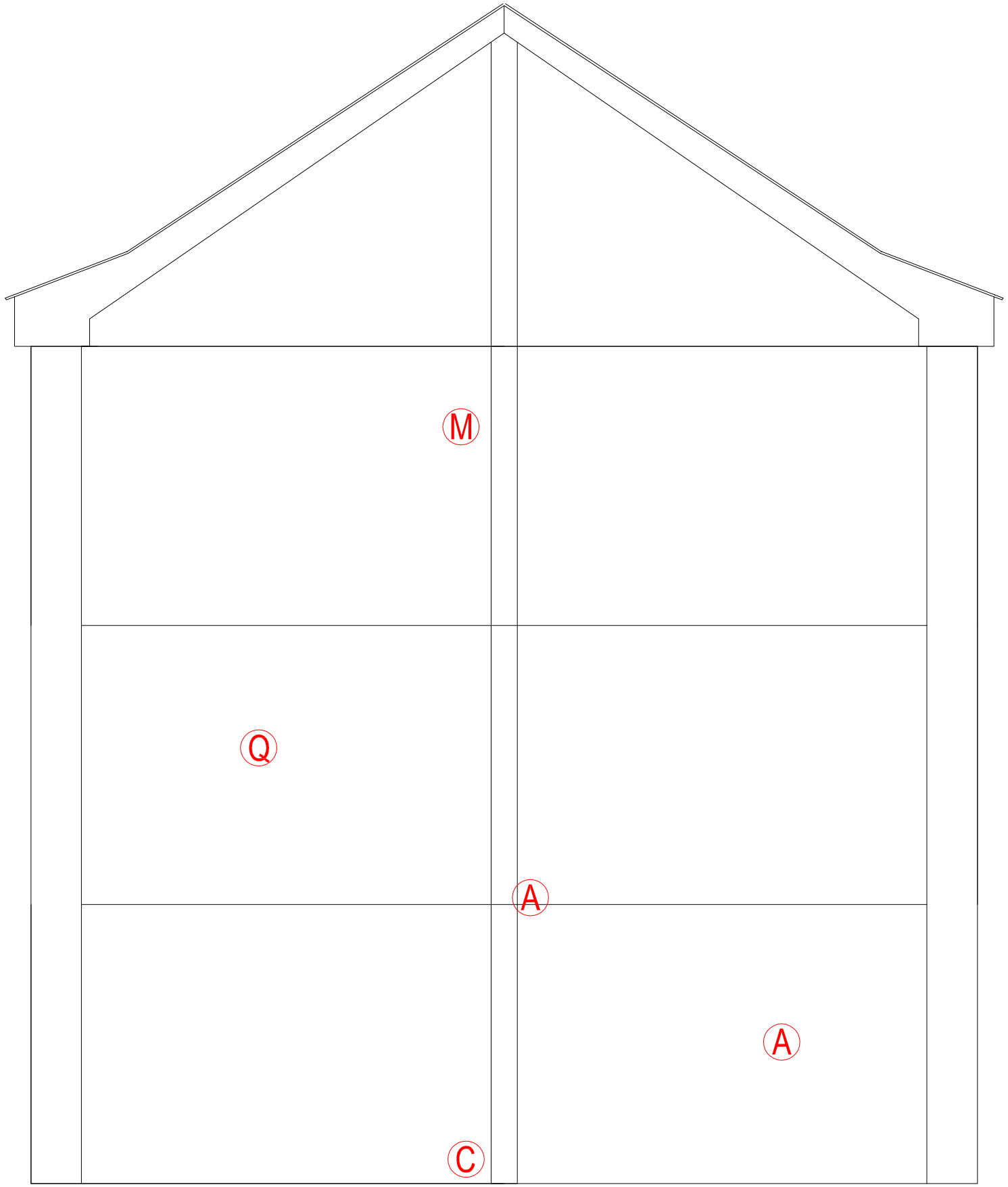

RH GABLE ELEVATION
(SCALE 1:30)

10 30 50
20 40

Do not scale from this drawing.
All dimensions must be checked on site by the Contractor prior to the commencement of any fabrication or building works.
Where applicable, dimensions and details are to be read in conjunction with specialist consultants' drawings and/or other specifications; any disparity is to be brought to the attention of Michael Dyson Associates Limited prior to the commencement of any fabrication or building works.
©This drawing is the property and copyright of Michael Dyson Associates Limited; It shall not be copied to any other party without the express written consent of an authorised director of Michael Dyson Associates Limited.

NOTES

REV	DATE	AMENDMENTS	BY	APR'D

West House, Meltham Road, Honley,
Huddersfield HD9 6LB
t. 01484 666888 f. 01484 664186
w. www.mdyson.co.uk

CLIENT :

RPS PLANNING & DEVELOPMENT

PROJECT :

STRUCTURAL SURVEY FOR 4NR REEMA FLATS BLOCKS IN MILTON KEYNES

TITLE :

TYPICAL EXISTING RH GABLE ELEVATION
AVON HOUSE 66 - 76

DRAWN BY :	NG	APPROVED BY :	
DATE :	23/08/2013	DATE :	
SCALE :	1:30	ORIGINAL DRAWING SIZE 841 x 594 - A1	
DRAWING No :	704-(REEMA)-7551	REV.	

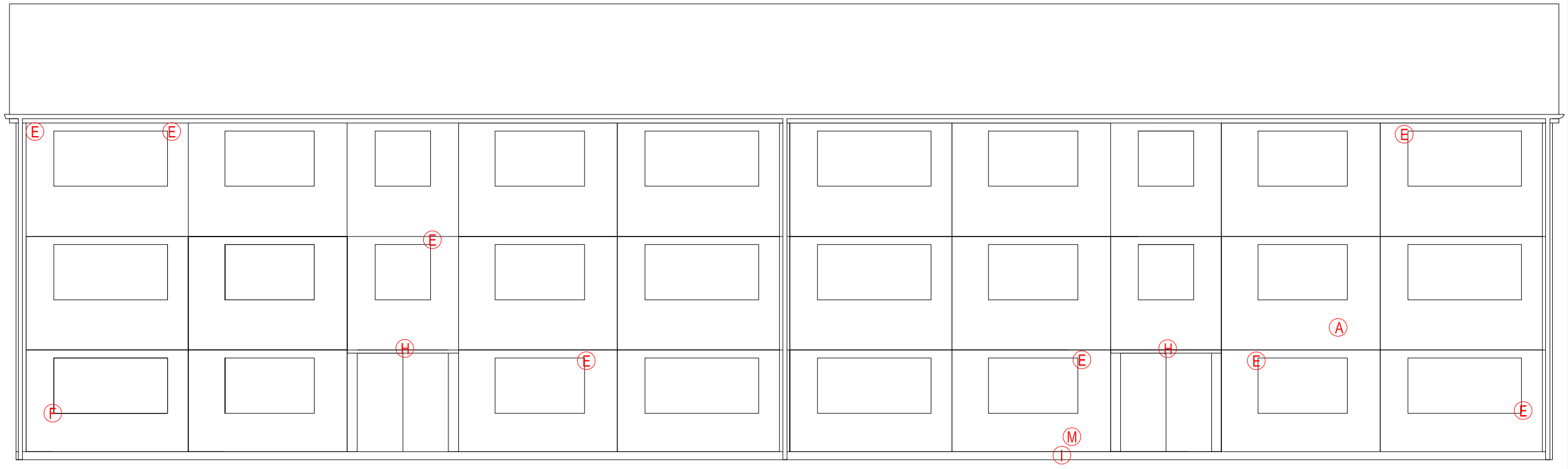

FRONT ELEVATION
(SCALE 1:30)

10 30 50
20 40

Do not scale from this drawing.
All dimensions must be checked on site by the Contractor prior to the commencement of any fabrication or building works.
Where applicable, dimensions and details are to be read in conjunction with specialist consultants' drawings and/or other specifications; any disparity is to be brought to the attention of Michael Dyson Associates Limited prior to the commencement of any fabrication or building works.
©This drawing is the property and copyright of Michael Dyson Associates Limited; It shall not be copied to any other party without the express written consent of an authorised director of Michael Dyson Associates Limited.

NOTES

REV	DATE	AMENDMENTS	BY	APR'D

West House, Meltham Road, Honley,
Huddersfield HD9 6LB
t. 01484 666888 f. 01484 664186
w. www.mdyson.co.uk

CLIENT :

RPS PLANNING & DEVELOPMENT

PROJECT :

STRUCTURAL SURVEY FOR 4NR REEMA FLATS BLOCKS IN MILTON KEYNES

TITLE :

TYPICAL EXISTING FRONT ELEVATION
AVON HOUSE 77-100

DRAWN BY :	NG	APPROVED BY :	
DATE :	23/08/2013	DATE :	
SCALE :	1:30	ORIGINAL DRAWING SIZE 841 x 594 - A1	
DRAWING No :	601-(REEMA)-7551	REV.	

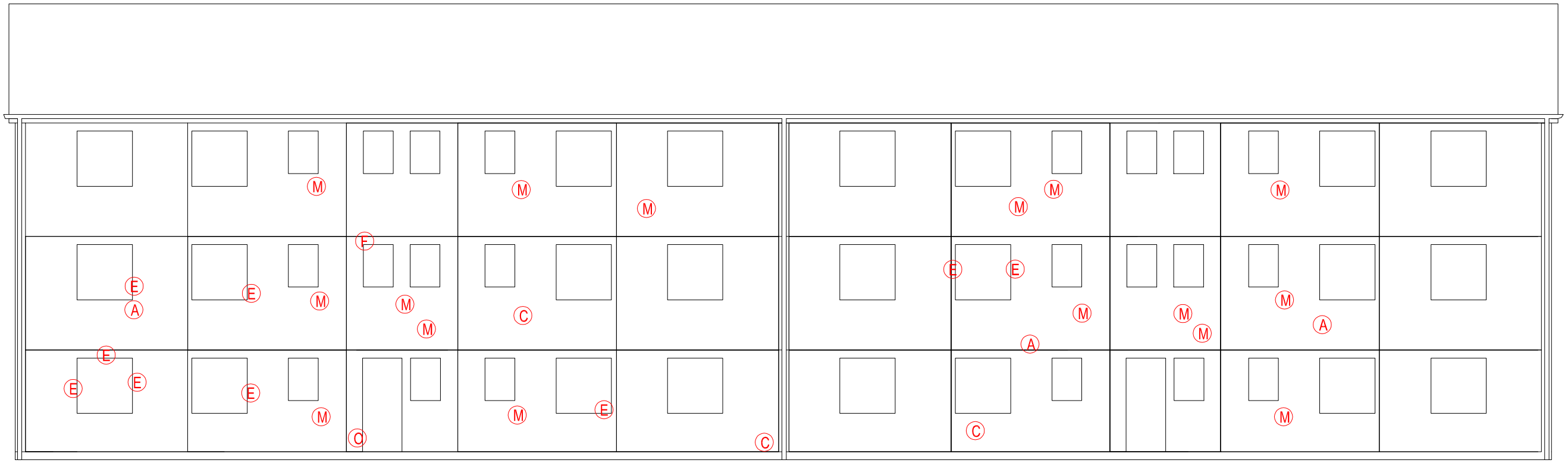

REAR ELEVATION
(SCALE 1:30)

10 30 50
20 40

Do not scale from this drawing.
All dimensions must be checked on site by the Contractor prior to the commencement of any fabrication or building works.
Where applicable, dimensions and details are to be read in conjunction with specialist consultants' drawings and/or other specifications; any disparity is to be brought to the attention of Michael Dyson Associates Limited prior to the commencement of any fabrication or building works.
©This drawing is the property and copyright of Michael Dyson Associates Limited; It shall not be copied to any other party without the express written consent of an authorised director of Michael Dyson Associates Limited.

NOTES

REV	DATE	AMENDMENTS	BY	APR'D

West House, Meltham Road, Honley,
Huddersfield HD9 6LB
t. 01484 666888 f. 01484 664186
w. www.mdyson.co.uk

CLIENT :

RPS PLANNING & DEVELOPMENT

PROJECT :

STRUCTURAL SURVEY FOR 4NR REEMA FLATS BLOCKS IN MILTON KEYNES

TITLE :

TYPICAL EXISTING REAR ELEVATIONS
AVON HOUSE 77-100

DRAWN BY :	SM	APPROVED BY :	
DATE :	25/06/2013	DATE :	
SCALE :	1:30	ORIGINAL DRAWING SIZE 841 x 594 - A1	
DRAWING No :	602-(REEMA)-7551	REV.	

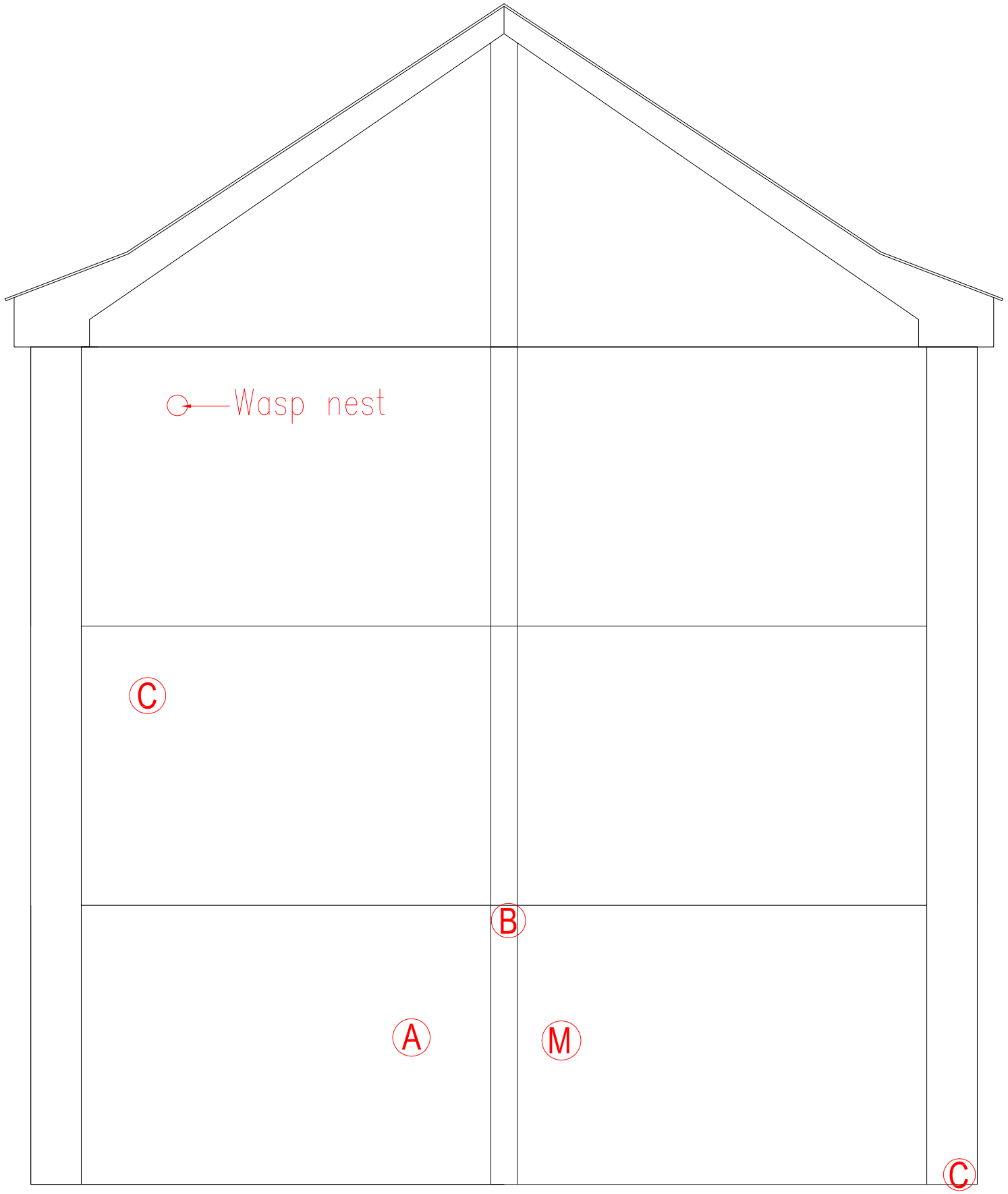

LH GABLE ELEVATION
(SCALE 1:30)

10 30 50
20 40

Do not scale from this drawing.
All dimensions must be checked on site by the Contractor prior to the commencement of any fabrication or building works.
Where applicable, dimensions and details are to be read in conjunction with specialist consultants' drawings and/or other specifications; any disparity is to be brought to the attention of Michael Dyson Associates Limited prior to the commencement of any fabrication or building works.
©This drawing is the property and copyright of Michael Dyson Associates Limited; It shall not be copied to any other party without the express written consent of an authorised director of Michael Dyson Associates Limited.

NOTES

REV	DATE	AMENDMENTS	BY	APR'D

West House, Meltham Road, Honley,
Huddersfield HD9 6LB
t. 01484 666888 f. 01484 664186
w. www.mdyson.co.uk

CLIENT :

RPS PLANNING & DEVELOPMENT

PROJECT :

STRUCTURAL SURVEY FOR 4NR REEMA FLATS BLOCKS IN MILTON KEYNES

TITLE :

TYPICAL EXISTING LH GABLE ELEVATION
AVON HOUSE 77- 100

DRAWN BY :	NG	APPROVED BY :	
DATE :	23/08/2013	DATE :	
SCALE :	1:30	ORIGINAL DRAWING SIZE 841 x 594 - A1	
DRAWING No :	603-(REEMA)-7551	REV.	

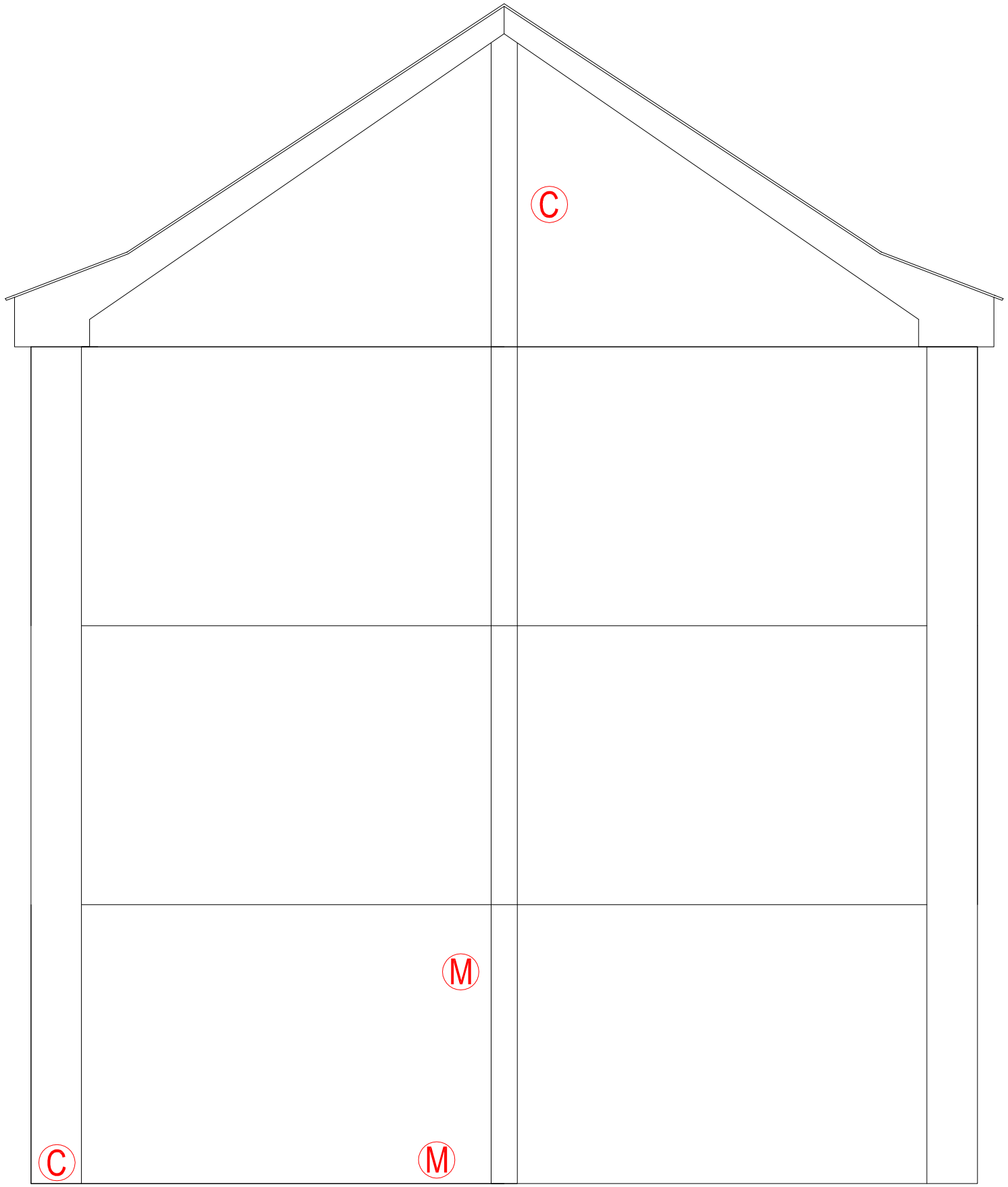

RH GABLE ELEVATION
(SCALE 1:30)

10 30 50
20 40

Do not scale from this drawing.
All dimensions must be checked on site by the Contractor prior to the commencement of any fabrication or building works.
Where applicable, dimensions and details are to be read in conjunction with specialist consultants' drawings and/or other specifications; any disparity is to be brought to the attention of Michael Dyson Associates Limited prior to the commencement of any fabrication or building works.
©This drawing is the property and copyright of Michael Dyson Associates Limited; It shall not be copied to any other party without the express written consent of an authorised director of Michael Dyson Associates Limited.

NOTES

REV	DATE	AMENDMENTS	BY	APR'D

West House, Meltham Road, Honley,
Huddersfield HD9 6LB
t. 01484 666888 f. 01484 664186
w. www.mdyson.co.uk

CLIENT :

RPS PLANNING & DEVELOPMENT

PROJECT :

STRUCTURAL SURVEY FOR 4NR REEMA FLATS BLOCKS IN MILTON KEYNES

TITLE :

TYPICAL EXISTING RH GABLE ELEVATION
AVON HOUSE 77-100

DRAWN BY :	NG	APPROVED BY :	
DATE :	23/08/2013	DATE :	
SCALE :	1:30	ORIGINAL DRAWING SIZE 841 x 594 - A1	
DRAWING No :	604-(REEMA)-7551	REV.	

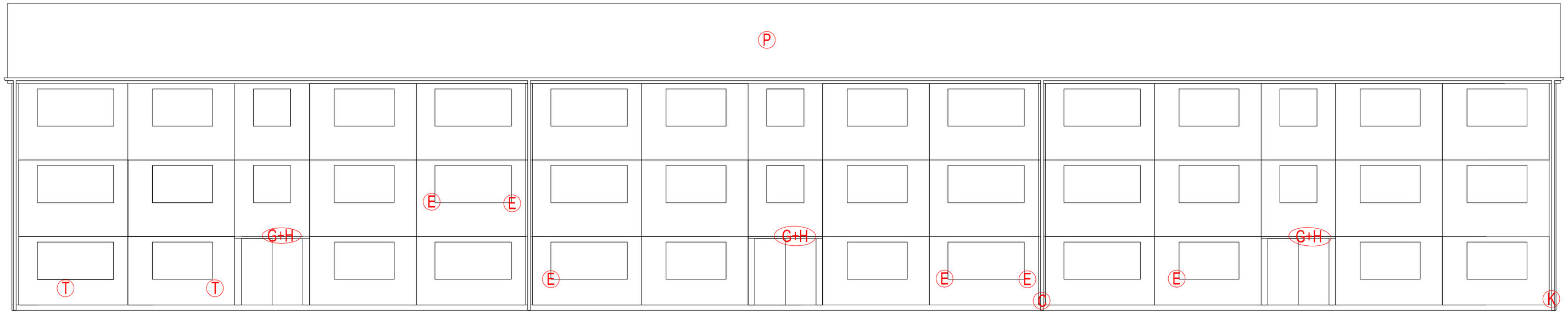

FRONT ELEVATION
(SCALE 1:30)

10 30 50
20 40

Do not scale from this drawing.
All dimensions must be checked on site by the Contractor prior to the commencement of any fabrication or building works.
Where applicable, dimensions and details are to be read in conjunction with specialist consultants' drawings and/or other specifications; any disparity is to be brought to the attention of Michael Dyson Associates Limited prior to the commencement of any fabrication or building works.
©This drawing is the property and copyright of Michael Dyson Associates Limited; It shall not be copied to any other party without the express written consent of an authorised director of Michael Dyson Associates Limited.

NOTES

REV	DATE	AMENDMENTS	BY	APR'D

West House, Meltham Road, Honley,
Huddersfield HD9 6LB
t. 01484 666888 f. 01484 664186
w. www.mdyson.co.uk

CLIENT :

RPS PLANNING & DEVELOPMENT

PROJECT :

STRUCTURAL SURVEY FOR 10NR REEMA FLATS BLOCKS IN MILTON KEYNES

TITLE :

TYPICAL EXISTING FRONT ELEVATION
CHERWELL HOUSE

DRAWN BY :	NG	APPROVED BY :	
DATE :	23/08/2013	DATE :	
SCALE :	1:30	ORIGINAL DRAWING SIZE 841 x 594 - A1	
DRAWING No :	501-(REEMA)-7551	REV.	

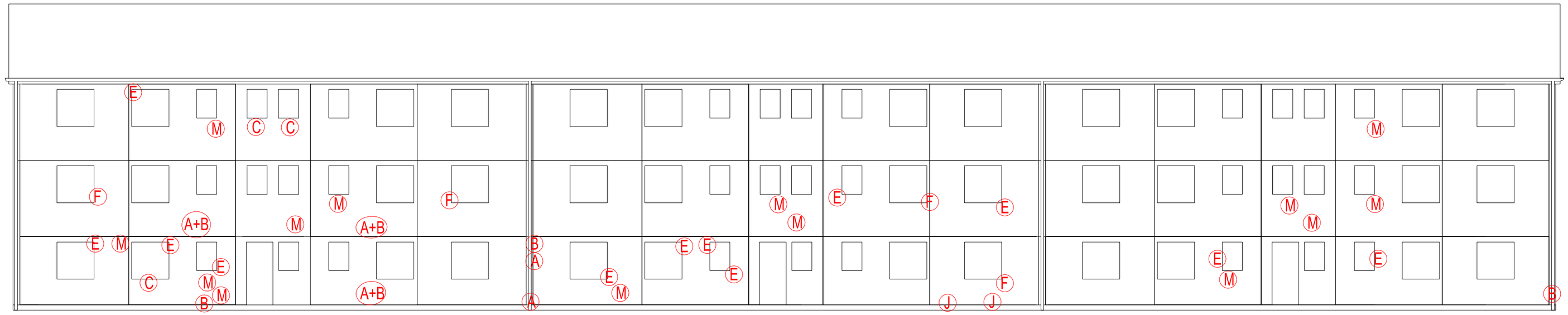

REAR ELEVATION
(SCALE 1:30)

10 30 50
20 40

Do not scale from this drawing.
All dimensions must be checked on site by the Contractor prior to the commencement of any fabrication or building works.
Where applicable, dimensions and details are to be read in conjunction with specialist consultants' drawings and/or other specifications; any disparity is to be brought to the attention of Michael Dyson Associates Limited prior to the commencement of any fabrication or building works.
©This drawing is the property and copyright of Michael Dyson Associates Limited; It shall not be copied to any other party without the express written consent of an authorised director of Michael Dyson Associates Limited.

NOTES

REV	DATE	AMENDMENTS	BY	APR'D

West House, Meltham Road, Honley,
Huddersfield HD9 6LB
t. 01484 666888 f. 01484 664186
w. www.mdyson.co.uk

CLIENT :

RPS PLANNING & DEVELOPMENT

PROJECT :

STRUCTURAL SURVEY FOR 10NR REEMA FLATS BLOCKS IN MILTON KEYNES

TITLE :

TYPICAL EXISTING REAR ELEVATIONS WALTHAM HOUSE

DRAWN BY :	SM	APPROVED BY :	
DATE :	25/06/2013	DATE :	
SCALE :	1:30	ORIGINAL DRAWING SIZE 841 x 594 - A1	
DRAWING No :	502-(REEMA)-7551	REV.	

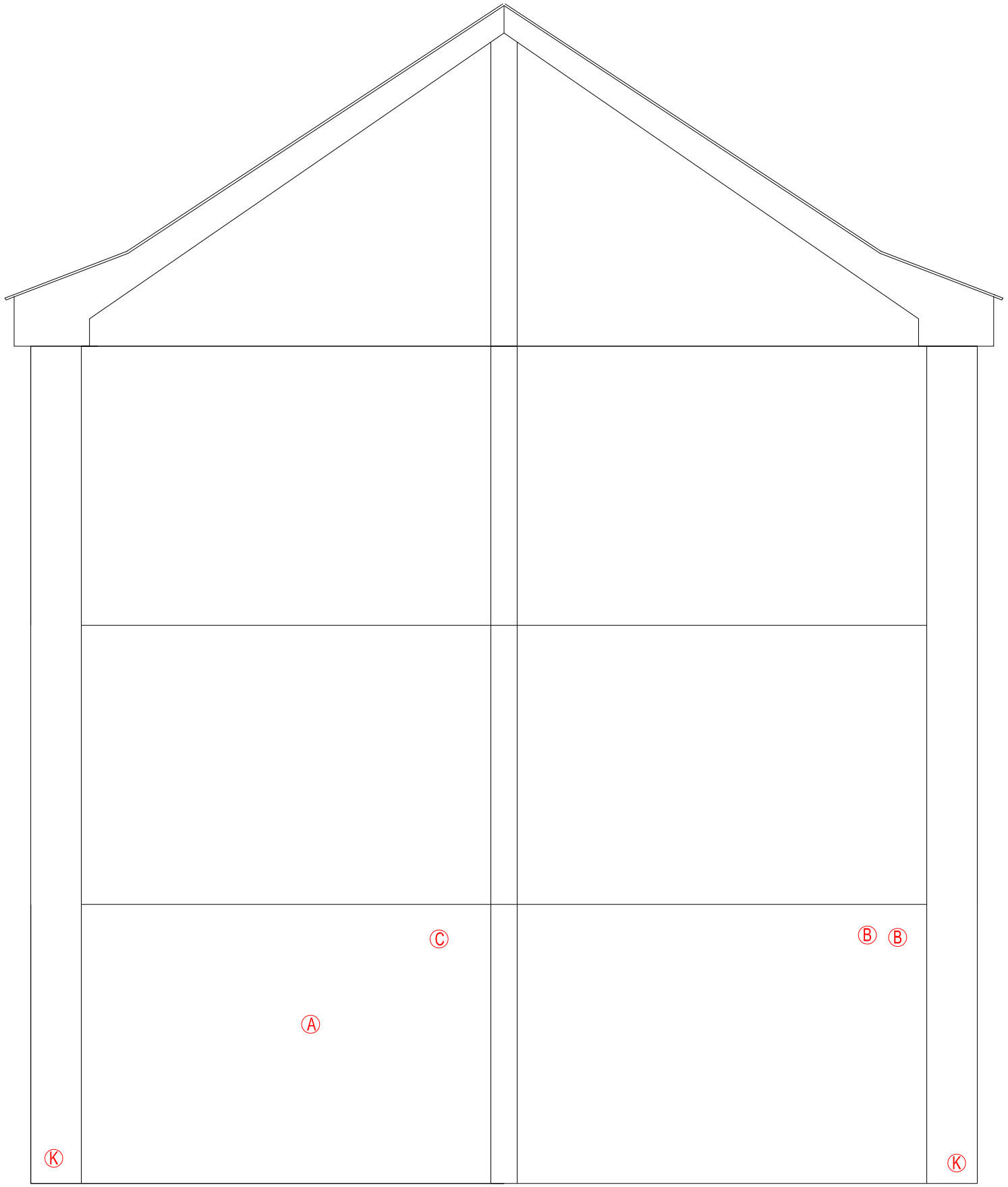

LH GABLE ELEVATION
(SCALE 1:30)

10 30 50
20 40

Do not scale from this drawing.
All dimensions must be checked on site by the Contractor prior to the commencement of any fabrication or building works.
Where applicable, dimensions and details are to be read in conjunction with specialist consultants' drawings and/or other specifications; any disparity is to be brought to the attention of Michael Dyson Associates Limited prior to the commencement of any fabrication or building works.
©This drawing is the property and copyright of Michael Dyson Associates Limited; It shall not be copied to any other party without the express written consent of an authorised director of Michael Dyson Associates Limited.

NOTES

REV	DATE	AMENDMENTS	BY	APR'D

West House, Meltham Road, Honley,
Huddersfield HD9 6LB
t. 01484 666888 f. 01484 664186
w. www.mdyson.co.uk

CLIENT :

RPS PLANNING & DEVELOPMENT

PROJECT :

STRUCTURAL SURVEY FOR 4NR REEMA FLATS BLOCKS IN MILTON KEYNES

TITLE :

TYPICAL EXISTING LH GABLE ELEVATION
CHERWELL HOUSE

DRAWN BY :	NG	APPROVED BY :	
DATE :	23/08/2013	DATE :	
SCALE :	1:30	ORIGINAL DRAWING SIZE 841 x 594 - A1	
DRAWING No :	503-(REEMA)-7551	REV.	

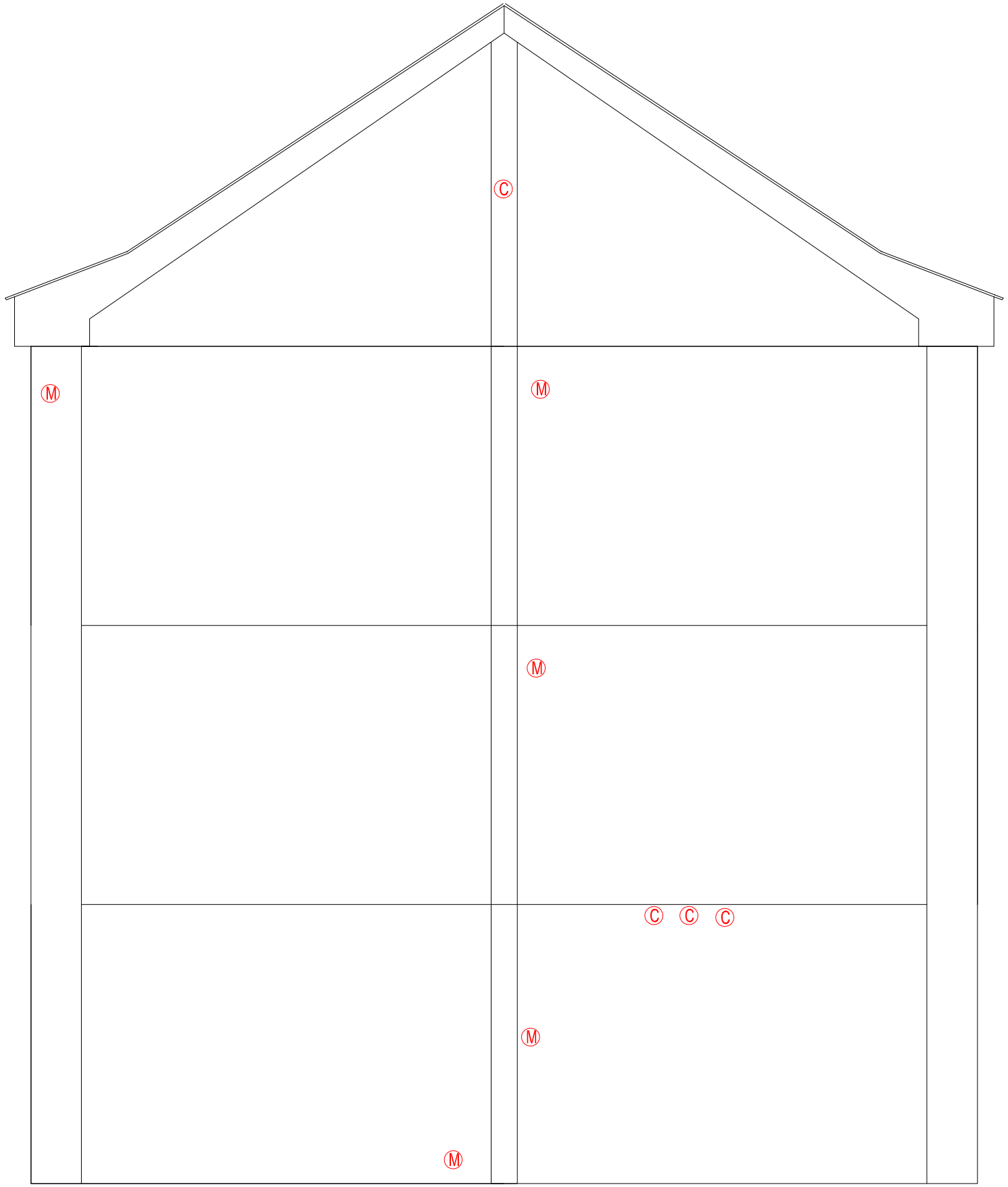

RH GABLE ELEVATION
(SCALE 1:30)

10 30 50
20 40

Do not scale from this drawing.
All dimensions must be checked on site by the Contractor prior to the commencement of any fabrication or building works.
Where applicable, dimensions and details are to be read in conjunction with specialist consultants' drawings and/or other specifications; any disparity is to be brought to the attention of Michael Dyson Associates Limited prior to the commencement of any fabrication or building works.
©This drawing is the property and copyright of Michael Dyson Associates Limited; It shall not be copied to any other party without the express written consent of an authorised director of Michael Dyson Associates Limited.

NOTES

REV	DATE	AMENDMENTS	BY	APR'D

West House, Meltham Road, Honley,
Huddersfield HD9 6LB
t. 01484 666888 f. 01484 664186
w. www.mdyson.co.uk

CLIENT :

RPS PLANNING & DEVELOPMENT

PROJECT :

STRUCTURAL SURVEY FOR 10NR REEMA FLATS BLOCKS IN MILTON KEYNES

TITLE :

TYPICAL EXISTING RH GABLE ELEVATION
CHERWELL HOUSE

DRAWN BY :	NG	APPROVED BY :	
DATE :	23/08/2013	DATE :	
SCALE :	1:30	ORIGINAL DRAWING SIZE 841 x 594 - A1	
DRAWING No :	504-(REEMA)-7551	REV.	

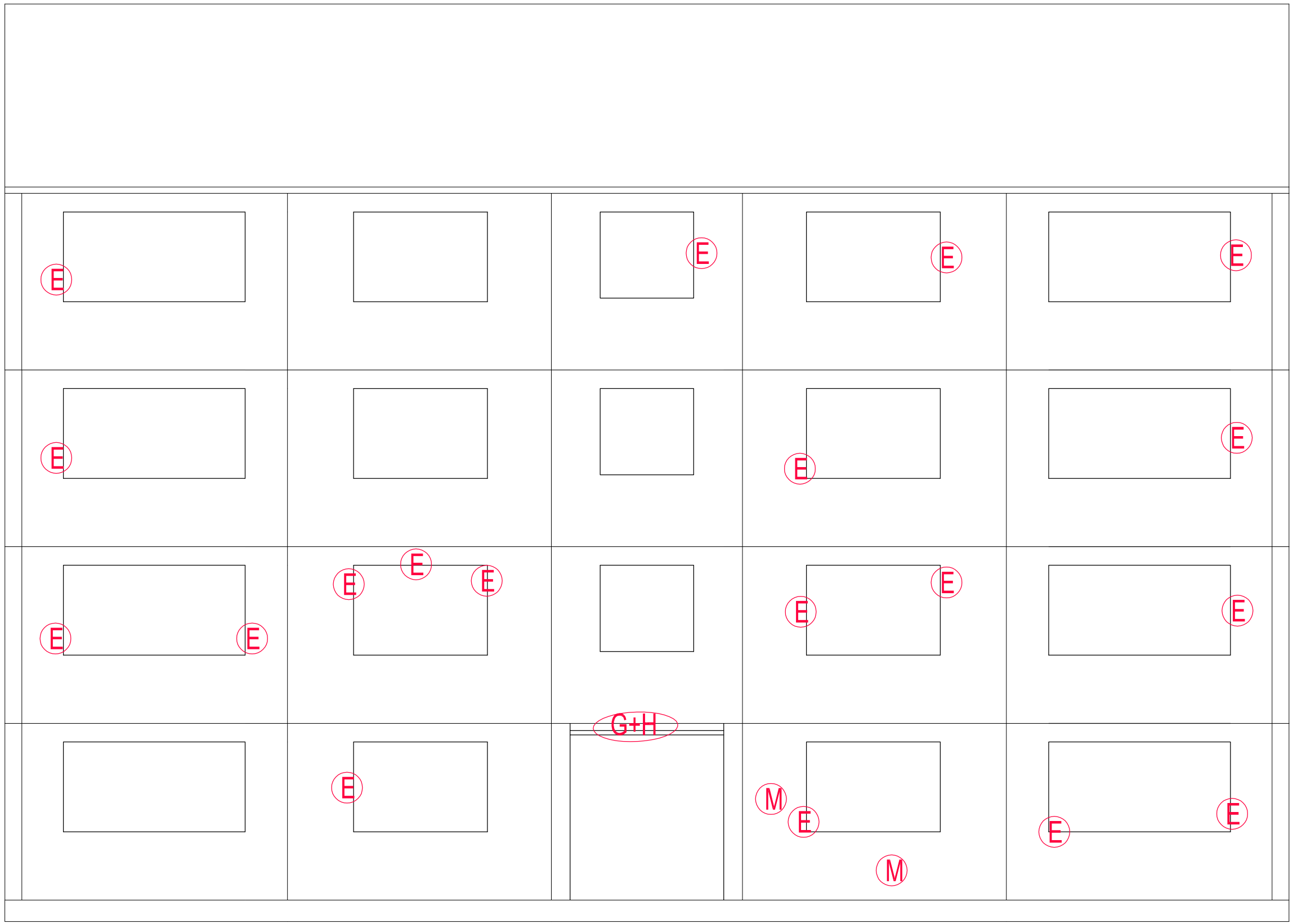

FRONT ELEVATION
(SCALE 1:30)

10 30 50
20 40

Do not scale from this drawing.
All dimensions must be checked on site by the Contractor prior to the commencement of any fabrication or building works.
Where applicable, dimensions and details are to be read in conjunction with specialist consultants' drawings and/or other specifications; any disparity is to be brought to the attention of Michael Dyson Associates Limited prior to the commencement of any fabrication or building works.
©This drawing is the property and copyright of Michael Dyson Associates Limited; It shall not be copied to any other party without the express written consent of an authorised director of Michael Dyson Associates Limited.

NOTES

REV	DATE	AMENDMENTS	BY	APR'D

West House, Meltham Road, Honley,
Huddersfield HD9 6LB
t. 01484 666888 f. 01484 664186
w. www.mdyson.co.uk

CLIENT :
RPS PLANNING & DEVELOPMENT

PROJECT :
STRUCTURAL SURVEY FOR 4NR REEMA FLATS BLOCKS IN MILTON KEYNES

TITLE :
TYPICAL EXISTING FRONT ELEVATION
DOUNE HOUSE

DRAWN BY :	SM	APPROVED BY :	
DATE :	25/06/2013	DATE :	
SCALE :	1:30	ORIGINAL DRAWING SIZE 841 x 594 - A1	
DRAWING No :	1501-(REEMA)-7551	REV.	

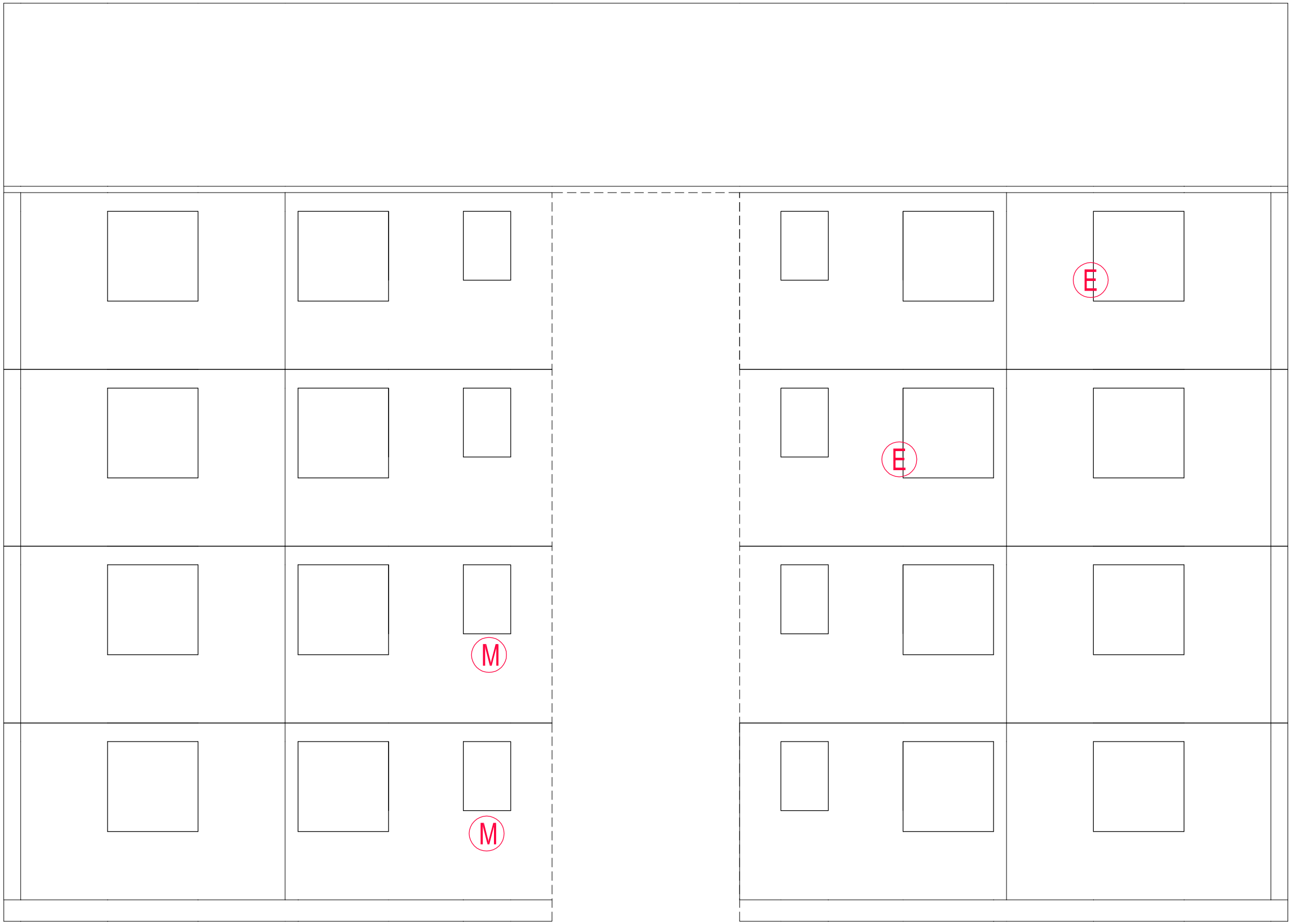

REAR ELEVATION
(SCALE 1:30)

10 30 50
20 40

Do not scale from this drawing.
All dimensions must be checked on site by the Contractor prior to the commencement of any fabrication or building works.
Where applicable, dimensions and details are to be read in conjunction with specialist consultants' drawings and/or other specifications; any disparity is to be brought to the attention of Michael Dyson Associates Limited prior to the commencement of any fabrication or building works.
©This drawing is the property and copyright of Michael Dyson Associates Limited; It shall not be copied to any other party without the express written consent of an authorised director of Michael Dyson Associates Limited.

NOTES

REV	DATE	AMENDMENTS	BY	APR'D

West House, Meltham Road, Honley,
Huddersfield HD9 6LB
t. 01484 666888 f. 01484 664186
w. www.mdyson.co.uk

CLIENT :

RPS PLANNING & DEVELOPMENT

PROJECT :

STRUCTURAL SURVEY FOR 4NR REEMA FLATS BLOCKS IN MILTON KEYNES

TITLE :

TYPICAL EXISTING REAR ELEVATIONS
DOUNE HOUSE

DRAWN BY :	SM	APPROVED BY :	
DATE :	25/06/2013	DATE :	
SCALE :	1:30	ORIGINAL DRAWING SIZE 841 x 594 - A1	
DRAWING No :	1502-(REEMA)-7551	REV.	

LH GABLE ELEVATION
(SCALE 1:30)

10 30 50
20 40

Do not scale from this drawing.
All dimensions must be checked on site by the Contractor prior to the commencement of any fabrication or building works.
Where applicable, dimensions and details are to be read in conjunction with specialist consultants' drawings and/or other specifications; any disparity is to be brought to the attention of Michael Dyson Associates Limited prior to the commencement of any fabrication or building works.
©This drawing is the property and copyright of Michael Dyson Associates Limited; It shall not be copied to any other party without the express written consent of an authorised director of Michael Dyson Associates Limited.

NOTES

REV	DATE	AMENDMENTS	BY	APR'D

West House, Meltham Road, Honley,
Huddersfield HD9 6LB
t. 01484 666888 f. 01484 664186
w. www.mdyson.co.uk

CLIENT :

RPS PLANNING & DEVELOPMENT

PROJECT :

STRUCTURAL SURVEY FOR 4NR REEMA FLATS BLOCKS IN MILTON KEYNES

TITLE :

TYPICAL EXISTING LH GABLE ELEVATION
DOUNE HOUSE

DRAWN BY :	SM	APPROVED BY :	
DATE :	25/06/2013	DATE :	
SCALE :	1:30	ORIGINAL DRAWING SIZE 841 x 594 - A1	
DRAWING No :	1503-(REEMA)-7551	REV.	

RH GABLE ELEVATION
(SCALE 1:30)

10 30 50
20 40

Do not scale from this drawing.
All dimensions must be checked on site by the Contractor prior to the commencement of any fabrication or building works.
Where applicable, dimensions and details are to be read in conjunction with specialist consultants' drawings and/or other specifications; any disparity is to be brought to the attention of Michael Dyson Associates Limited prior to the commencement of any fabrication or building works.
©This drawing is the property and copyright of Michael Dyson Associates Limited; It shall not be copied to any other party without the express written consent of an authorised director of Michael Dyson Associates Limited.

NOTES

REV	DATE	AMENDMENTS	BY	APR'D

West House, Meltham Road, Honley,
Huddersfield HD9 6LB
t. 01484 666888 f. 01484 664186
w. www.mdyson.co.uk

CLIENT :

RPS PLANNING & DEVELOPMENT

PROJECT :

STRUCTURAL SURVEY FOR 4NR REEMA FLATS BLOCKS IN MILTON KEYNES

TITLE :

TYPICAL EXISTING RH GABLE ELEVATION
DOUNE HOUSE

DRAWN BY :	SM	APPROVED BY :	
DATE :	25/06/2013	DATE :	
SCALE :	1:30	ORIGINAL DRAWING SIZE 841 x 594 - A1	
DRAWING No :	1504-(REEMA)-7551	REV.	

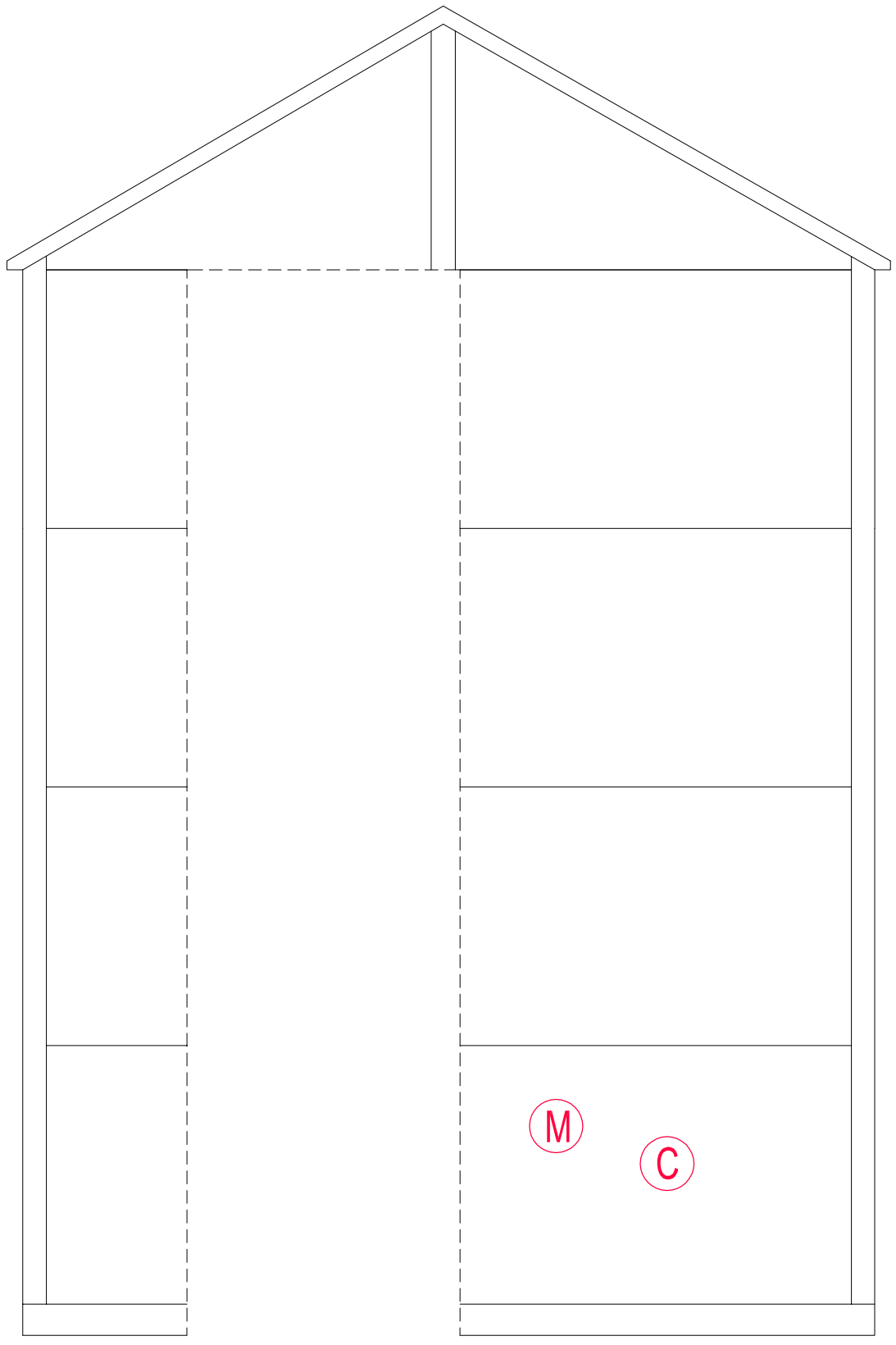

LINK GABLE ELEVATION
(SCALE 1:30)

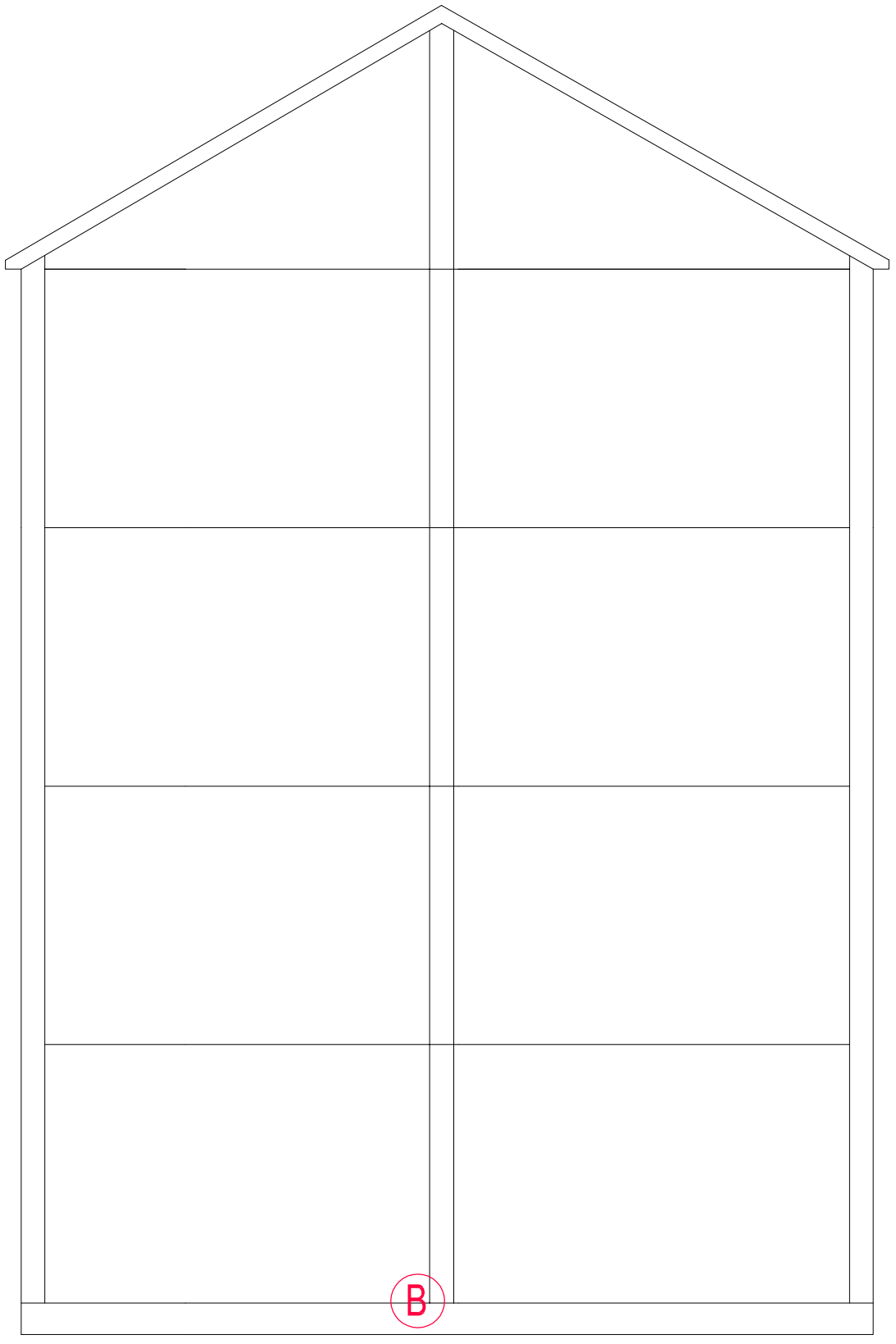

REAR LINK GABLE ELEVATION
(SCALE 1:30)

10 30 50
20 40

Do not scale from this drawing.
All dimensions must be checked on site by the Contractor prior to the commencement of any fabrication or building works.
Where applicable, dimensions and details are to be read in conjunction with specialist consultants' drawings and/or other specifications; any disparity is to be brought to the attention of Michael Dyson Associates Limited prior to the commencement of any fabrication or building works.
©This drawing is the property and copyright of Michael Dyson Associates Limited; It shall not be copied to any other party without the express written consent of an authorised director of Michael Dyson Associates Limited.

NOTES

REV	DATE	AMENDMENTS	BY	APR'D

West House, Meltham Road, Honley,
Huddersfield HD9 6LB
t. 01484 666888 f. 01484 664186
w. www.mdyson.co.uk

CLIENT :

RPS PLANNING & DEVELOPMENT

PROJECT :

STRUCTURAL SURVEY FOR 4NR REEMA FLATS BLOCKS IN MILTON KEYNES

TITLE :

TYPICAL EXISTING LINK GABLE ELEVATION
DOUNE HOUSE

DRAWN BY :	SM	APPROVED BY :	
DATE :	25/06/2013	DATE :	
SCALE :	1:30	ORIGINAL DRAWING SIZE 841 x 594 - A1	
DRAWING No :	1505-(REEMA)-7551	REV.	

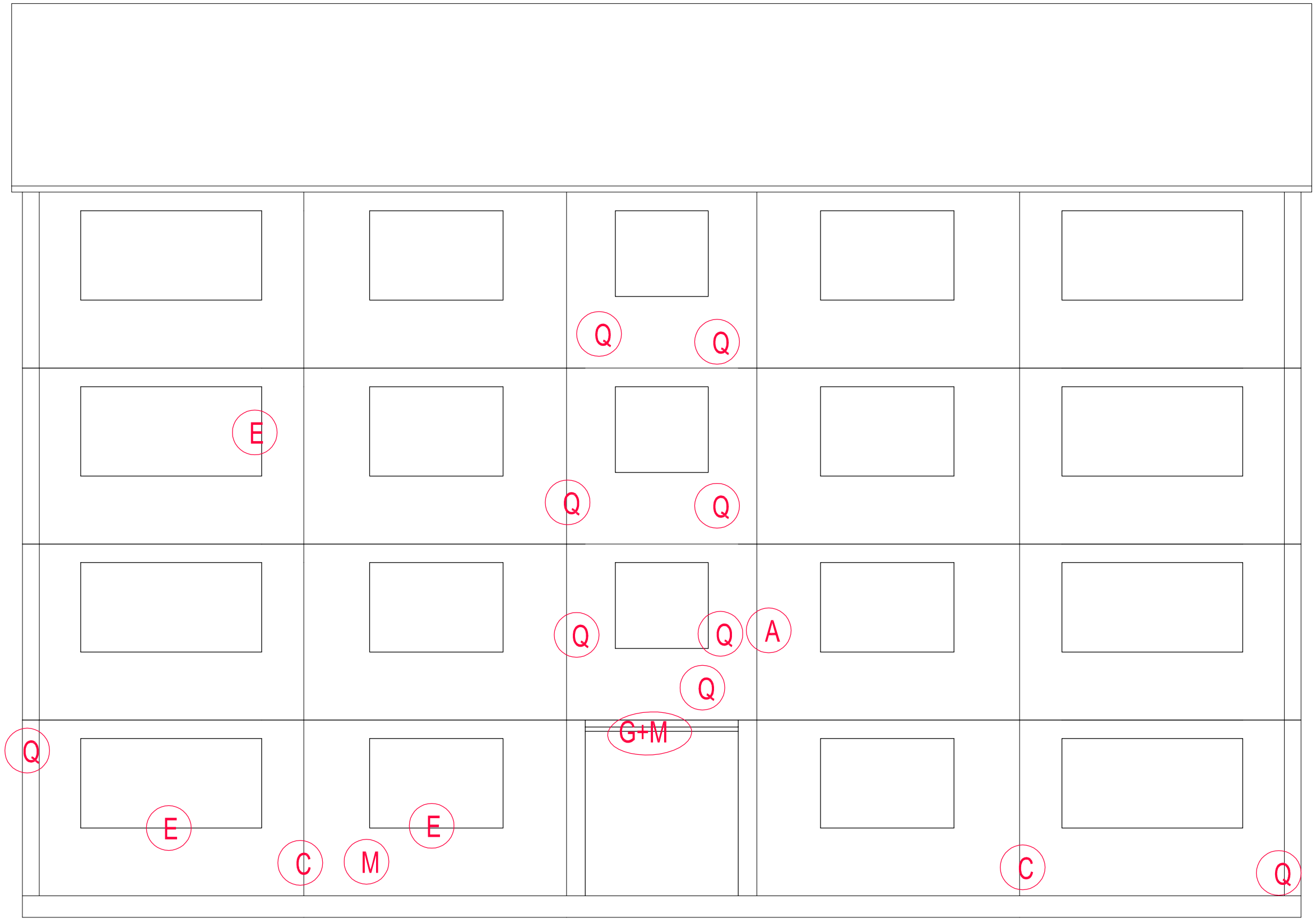

FRONT ELEVATION
(SCALE 1:30)

10 30 50
20 40

Do not scale from this drawing.
All dimensions must be checked on site by the Contractor prior to the commencement of any fabrication or building works.
Where applicable, dimensions and details are to be read in conjunction with specialist consultants' drawings and/or other specifications; any disparity is to be brought to the attention of Michael Dyson Associates Limited prior to the commencement of any fabrication or building works.
©This drawing is the property and copyright of Michael Dyson Associates Limited; It shall not be copied to any other party without the express written consent of an authorised director of Michael Dyson Associates Limited.

NOTES

REV	DATE	AMENDMENTS	BY	APR'D

West House, Meltham Road, Honley,
Huddersfield HD9 6LB
t. 01484 666888 f. 01484 664186
w. www.mdyson.co.uk

CLIENT :
RPS PLANNING & DEVELOPMENT

PROJECT :
STRUCTURAL SURVEY FOR 4NR REEMA FLATS BLOCKS IN MILTON KEYNES

TITLE :
TYPICAL EXISTING FRONT ELEVATION EDINBURGH HOUSE

DRAWN BY :	SM	APPROVED BY :	
DATE :	25/06/2013	DATE :	
SCALE :	1:30	ORIGINAL DRAWING SIZE 841 x 594 - A1	
DRAWING No :	1401-(REEMA)-7551	REV.	

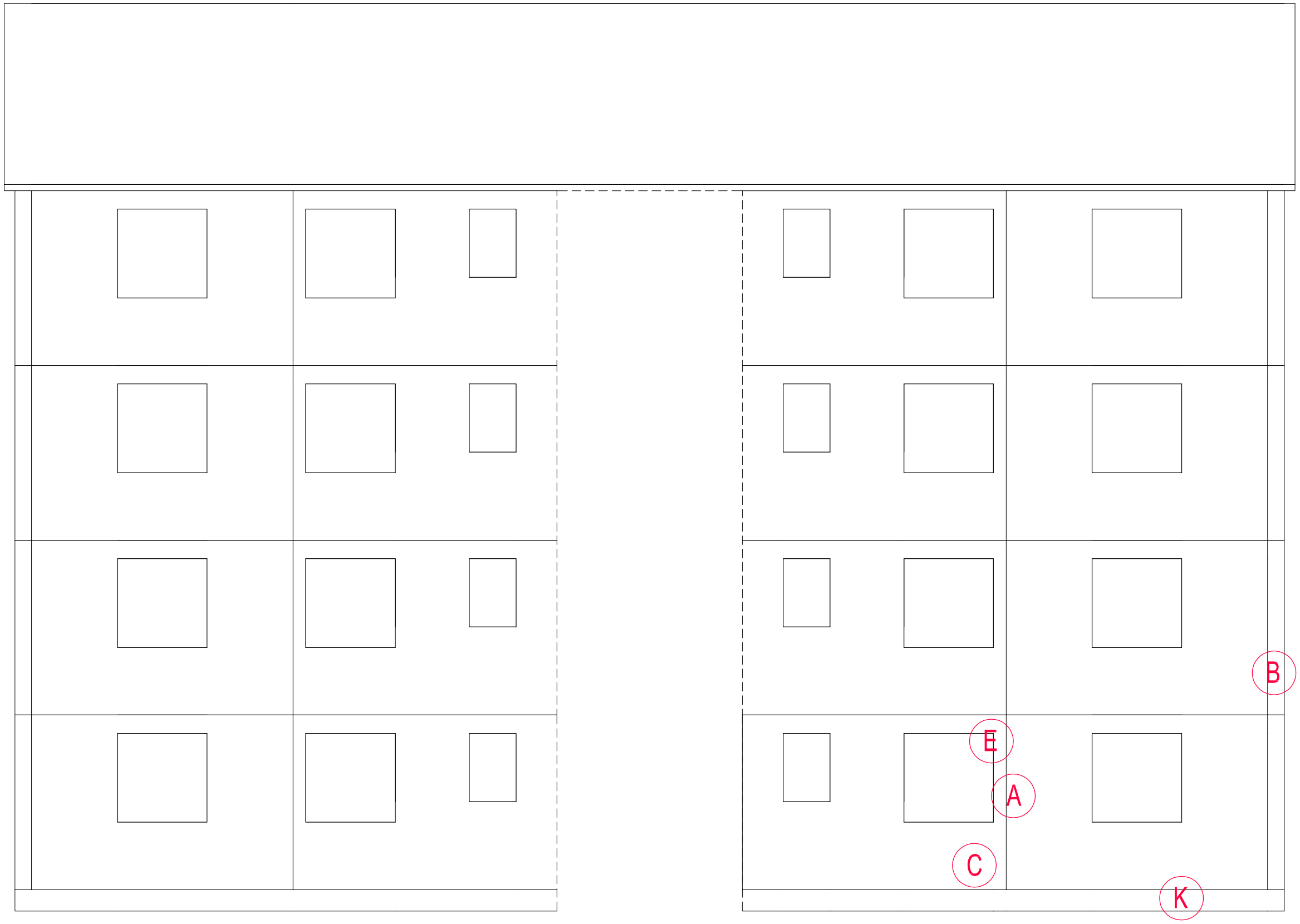

REAR ELEVATION
(SCALE 1:30)

10 30 50
20 40

Do not scale from this drawing.
All dimensions must be checked on site by the Contractor prior to the commencement of any fabrication or building works.
Where applicable, dimensions and details are to be read in conjunction with specialist consultants' drawings and/or other specifications; any disparity is to be brought to the attention of Michael Dyson Associates Limited prior to the commencement of any fabrication or building works.
©This drawing is the property and copyright of Michael Dyson Associates Limited; It shall not be copied to any other party without the express written consent of an authorised director of Michael Dyson Associates Limited.

NOTES

REV	DATE	AMENDMENTS	BY	APR'D

West House, Meltham Road, Honley,
Huddersfield HD9 6LB
t. 01484 666888 f. 01484 664186
w. www.mdyson.co.uk

CLIENT :
RPS PLANNING & DEVELOPMENT

PROJECT :
STRUCTURAL SURVEY FOR 4NR REEMA FLATS BLOCKS IN MILTON KEYNES

TITLE :
TYPICAL EXISTING REAR ELEVATION
EDINBURGH HOUSE

DRAWN BY :	SM	APPROVED BY :	
DATE :	25/06/2013	DATE :	
SCALE :	1:30	ORIGINAL DRAWING SIZE 841 x 594 - A1	
DRAWING No :	1402-(REEMA)-7551	REV.	

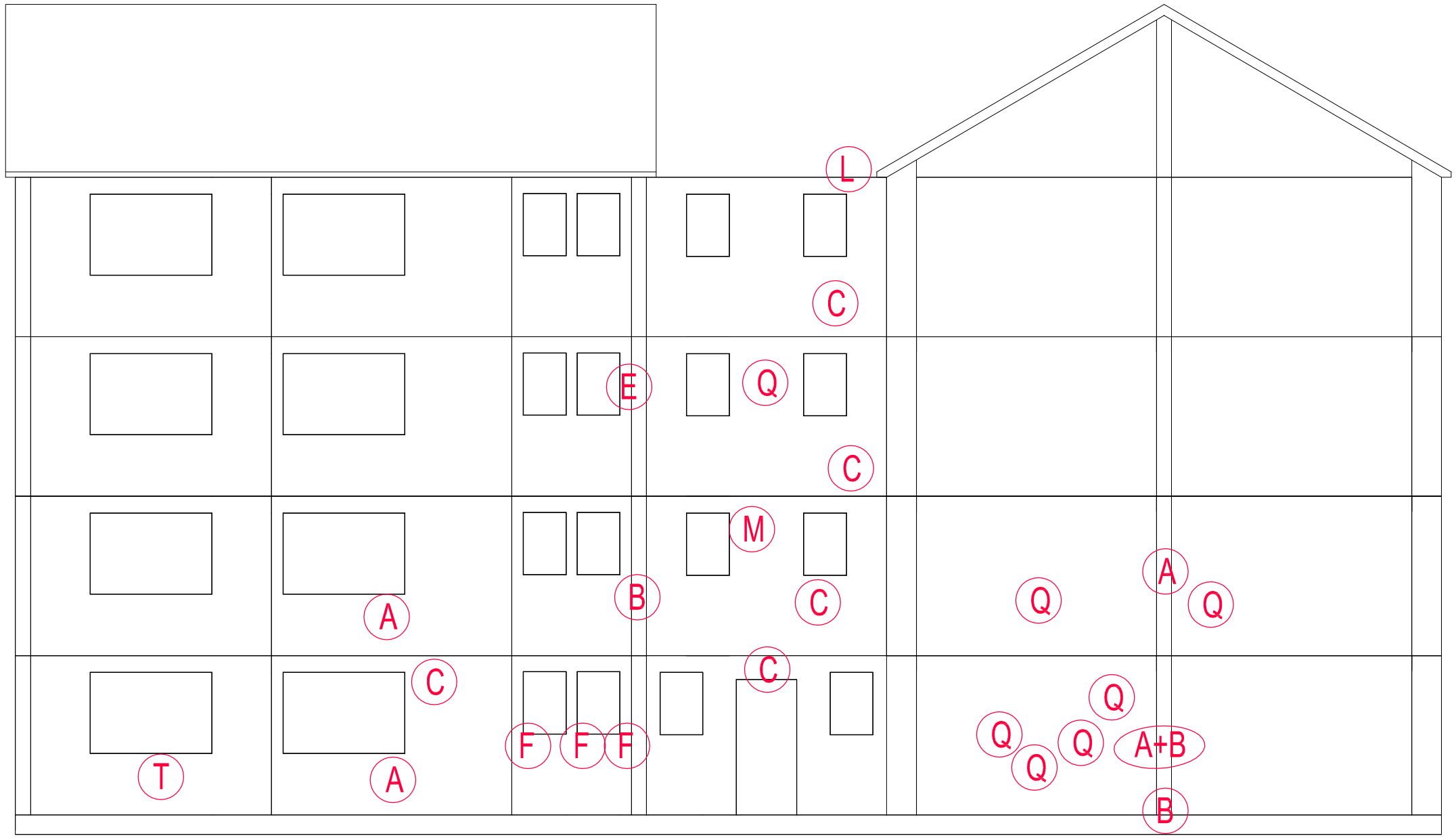

LH GABLE ELEVATION
(SCALE 1:40)

10 30 50
20 40

Do not scale from this drawing.
All dimensions must be checked on site by the Contractor prior to the commencement of any fabrication or building works.
Where applicable, dimensions and details are to be read in conjunction with specialist consultants' drawings and/or other specifications; any disparity is to be brought to the attention of Michael Dyson Associates Limited prior to the commencement of any fabrication or building works.
©This drawing is the property and copyright of Michael Dyson Associates Limited; It shall not be copied to any other party without the express written consent of an authorised director of Michael Dyson Associates Limited.

NOTES

REV	DATE	AMENDMENTS	BY	APR'D

West House, Meltham Road, Honley,
Huddersfield HD9 6LB
t. 01484 666888 f. 01484 664186
w. www.mdyson.co.uk

CLIENT :
RPS PLANNING & DEVELOPMENT

PROJECT :
STRUCTURAL SURVEY FOR 4NR REEMA FLATS BLOCKS IN MILTON KEYNES

TITLE :
TYPICAL EXISTING LH GABLE ELEVATION
EDINBURGH HOUSE

DRAWN BY :	SM	APPROVED BY :	
DATE :	25/06/2013	DATE :	
SCALE :	1:40	ORIGINAL DRAWING SIZE 841 x 594 - A1	
DRAWING No :	1403-(REEMA)-7551	REV.	

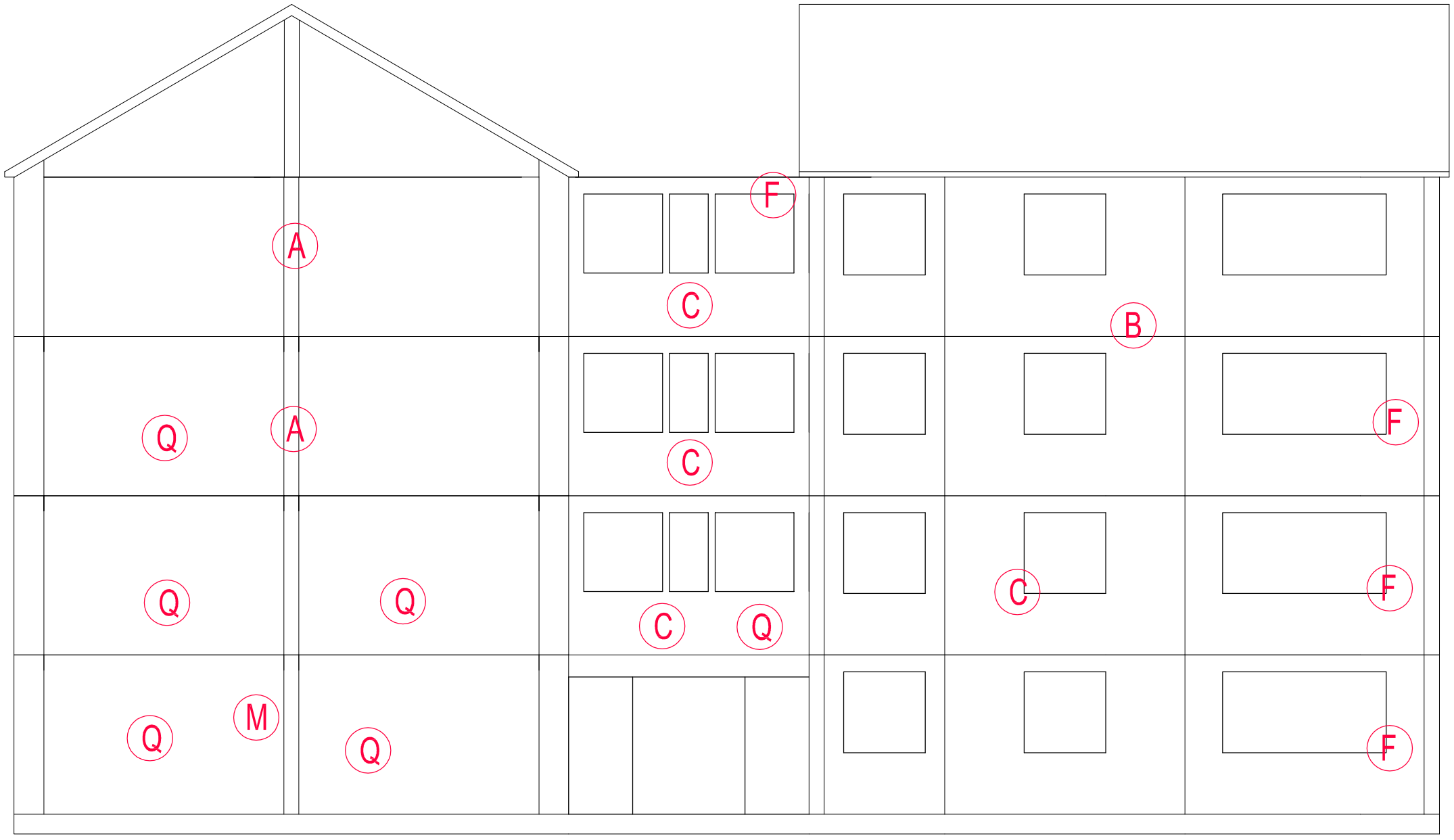

RH GABLE ELEVATION
(SCALE 1:40)

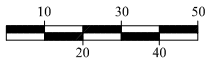

Do not scale from this drawing.
All dimensions must be checked on site by the Contractor prior to the commencement of any fabrication or building works.
Where applicable, dimensions and details are to be read in conjunction with specialist consultants' drawings and/or other specifications; any disparity is to be brought to the attention of Michael Dyson Associates Limited prior to the commencement of any fabrication or building works.
©This drawing is the property and copyright of Michael Dyson Associates Limited; It shall not be copied to any other party without the express written consent of an authorised director of Michael Dyson Associates Limited.

NOTES

REV	DATE	AMENDMENTS	BY	APR'D

West House, Meltham Road, Honley,
Huddersfield HD9 6LB
t. 01484 666888 f. 01484 664186
w. www.mdyson.co.uk

CLIENT :

RPS PLANNING & DEVELOPMENT

PROJECT :

STRUCTURAL SURVEY FOR 4NR REEMA FLATS BLOCKS IN MILTON KEYNES

TITLE :

TYPICAL EXISTING RH GABLE ELEVATION NORFOLK HOUSE

DRAWN BY :	SM	APPROVED BY :	
DATE :	25/06/2013	DATE :	
SCALE :	1:40	ORIGINAL DRAWING SIZE 841 x 594 - A1	
DRAWING No :	304-(REEMA)-7551	REV.	

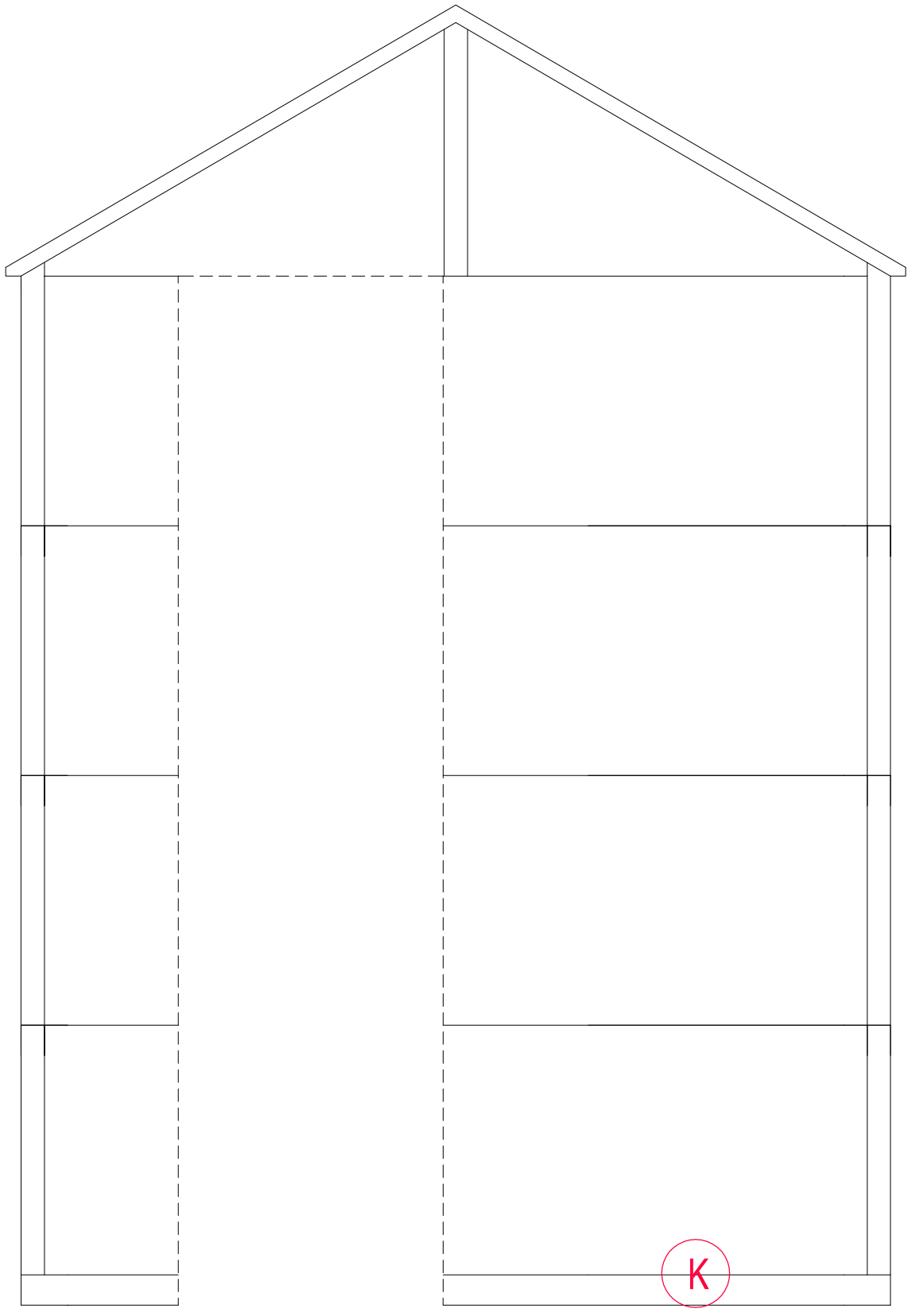

LINK GABLE ELEVATION
(SCALE 1:30)

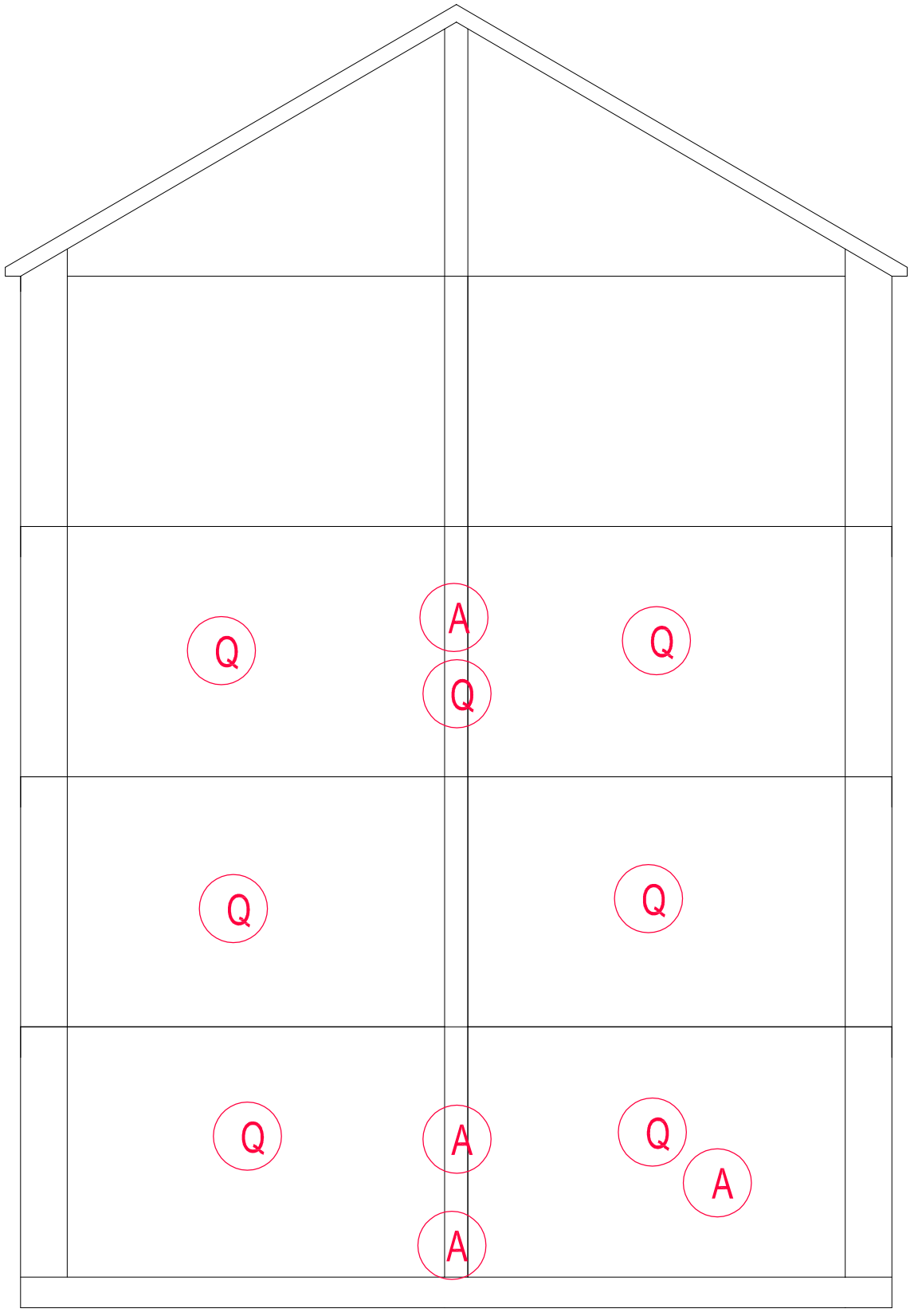

REAR LINK GABLE ELEVATION
(SCALE 1:30)

10 30 50
20 40

Do not scale from this drawing.
All dimensions must be checked on site by the Contractor prior to the commencement of any fabrication or building works.
Where applicable, dimensions and details are to be read in conjunction with specialist consultants' drawings and/or other specifications; any disparity is to be brought to the attention of Michael Dyson Associates Limited prior to the commencement of any fabrication or building works.
©This drawing is the property and copyright of Michael Dyson Associates Limited; It shall not be copied to any other party without the express written consent of an authorised director of Michael Dyson Associates Limited.

NOTES

Several rust spots in each section

REV	DATE	AMENDMENTS	BY	APR'D

West House, Meltham Road, Honley,
Huddersfield HD9 6LB
t. 01484 666888 f. 01484 664186
w. www.mdyson.co.uk

CLIENT :
RPS PLANNING & DEVELOPMENT

PROJECT :
STRUCTURAL SURVEY FOR 4NR REEMA FLATS BLOCKS IN MILTON KEYNES

TITLE :
TYPICAL EXISTING LINK GABLE ELEVATIONS EDINBURGH HOUSE

DRAWN BY :	SM	APPROVED BY :	
DATE :	25/06/2013	DATE :	
SCALE :	1:30	ORIGINAL DRAWING SIZE 841 x 594 - A1	
DRAWING No :	1405-(REEMA)-7551	REV.	

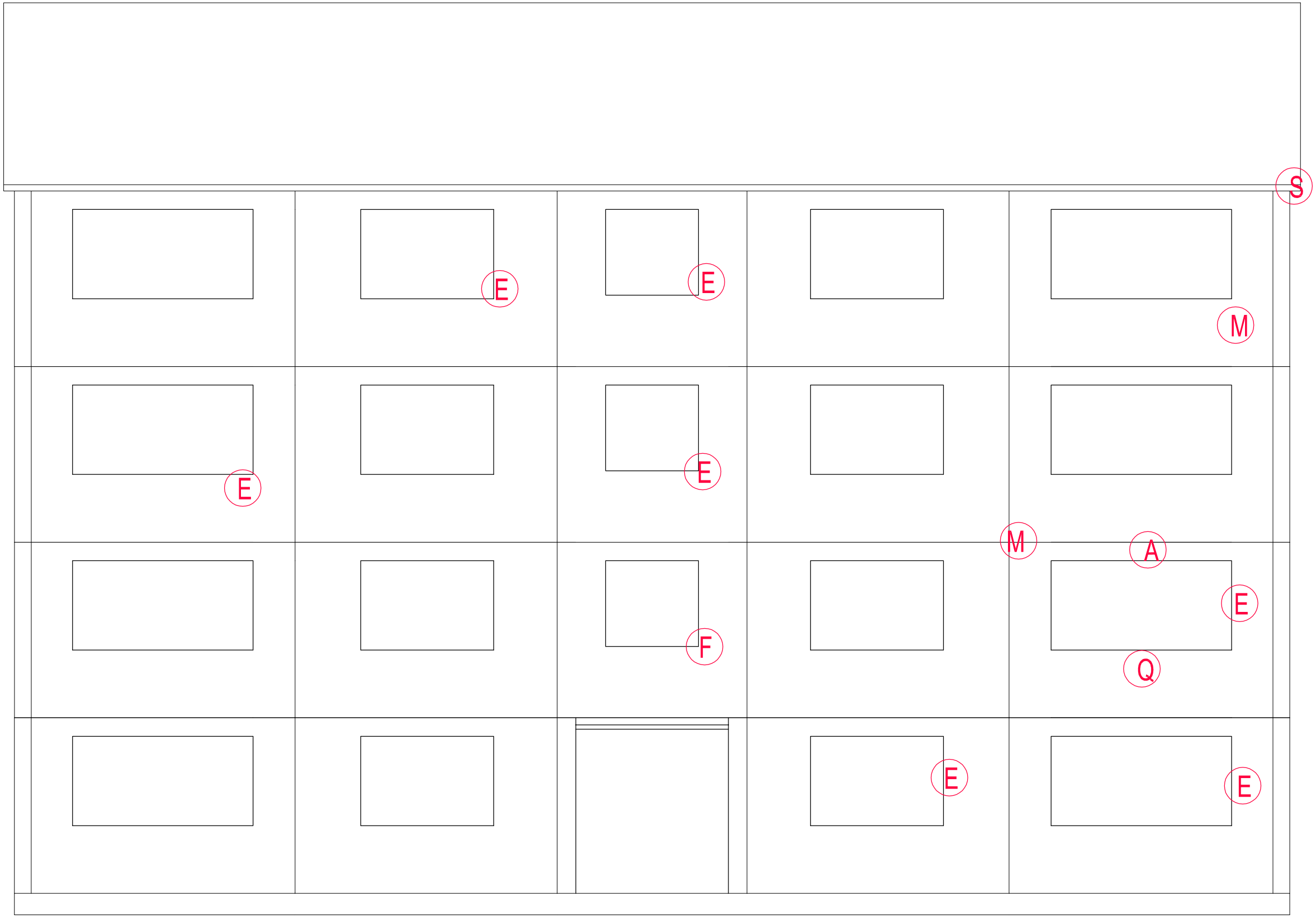

FRONT ELEVATION
(SCALE 1:30)

10 30 50
20 40

Do not scale from this drawing.
All dimensions must be checked on site by the Contractor prior to the commencement of any fabrication or building works.
Where applicable, dimensions and details are to be read in conjunction with specialist consultants' drawings and/or other specifications; any disparity is to be brought to the attention of Michael Dyson Associates Limited prior to the commencement of any fabrication or building works.
©This drawing is the property and copyright of Michael Dyson Associates Limited; It shall not be copied to any other party without the express written consent of an authorised director of Michael Dyson Associates Limited.

NOTES

REV	DATE	AMENDMENTS	BY	APR'D

West House, Meltham Road, Honley,
Huddersfield HD9 6LB
t. 01484 666888 f. 01484 664186
w. www.mdyson.co.uk

CLIENT :

RPS PLANNING & DEVELOPMENT

PROJECT :

STRUCTURAL SURVEY FOR 4NR REEMA FLATS BLOCKS IN MILTON KEYNES

TITLE :

TYPICAL EXISTING FRONT ELEVATION
FIFE HOUSE

DRAWN BY :	SM	APPROVED BY :	
DATE :	25/06/2013	DATE :	
SCALE :	1:30	ORIGINAL DRAWING SIZE 841 x 594 - A1	
DRAWING No :	1201-(REEMA)-7551	REV.	

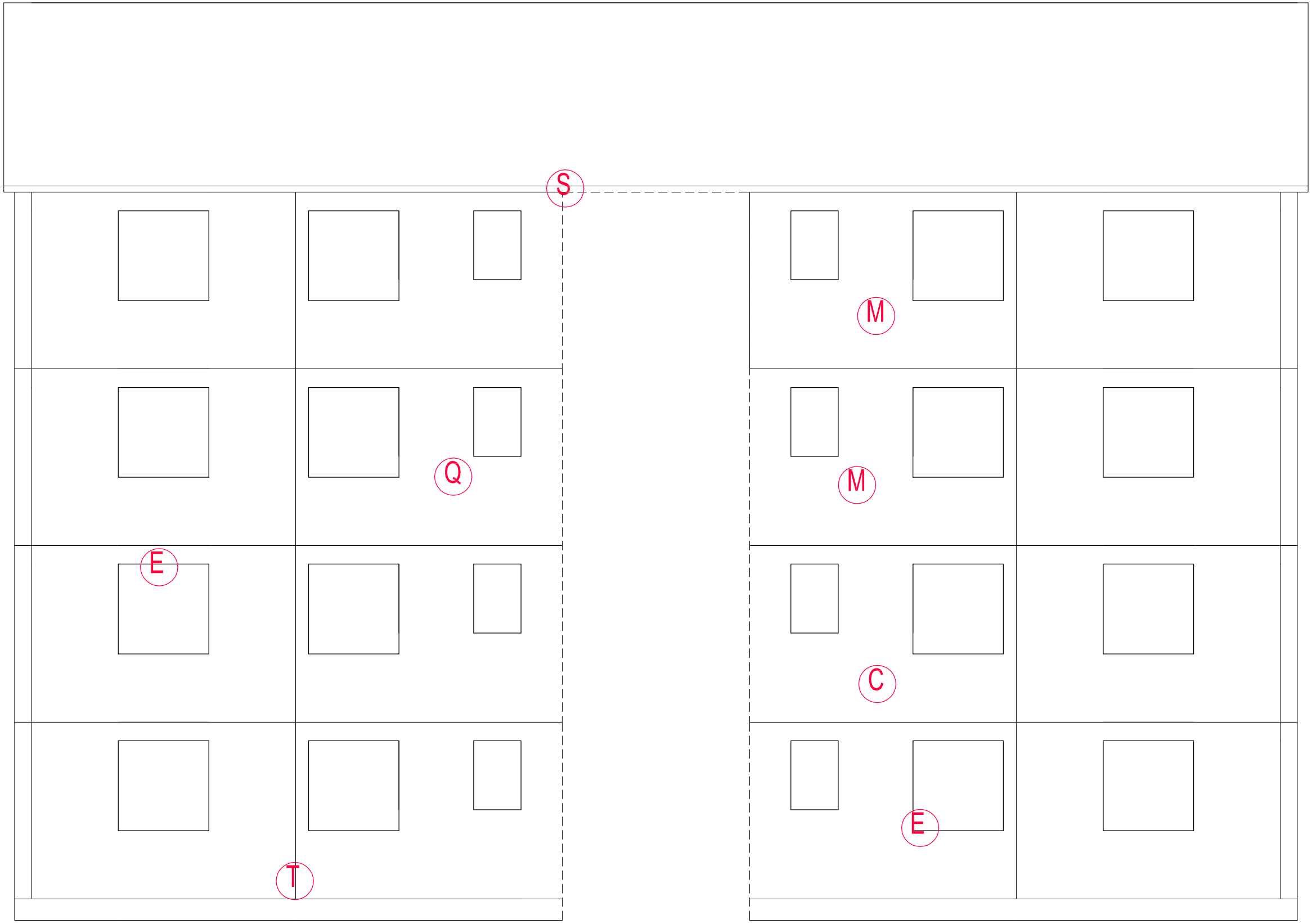

REAR ELEVATION
(SCALE 1:30)

10 30 50
20 40

Do not scale from this drawing.
All dimensions must be checked on site by the Contractor prior to the commencement of any fabrication or building works.
Where applicable, dimensions and details are to be read in conjunction with specialist consultants' drawings and/or other specifications; any disparity is to be brought to the attention of Michael Dyson Associates Limited prior to the commencement of any fabrication or building works.
©This drawing is the property and copyright of Michael Dyson Associates Limited; It shall not be copied to any other party without the express written consent of an authorised director of Michael Dyson Associates Limited.

NOTES

REV	DATE	AMENDMENTS	BY	APR'D

West House, Meltham Road, Honley,
Huddersfield HD9 6LB
t. 01484 666888 f. 01484 664186
w. www.mdyson.co.uk

CLIENT :

RPS PLANNING & DEVELOPMENT

PROJECT :

STRUCTURAL SURVEY FOR 4NR REEMA FLATS BLOCKS IN MILTON KEYNES

TITLE :

TYPICAL EXISTING REAR ELEVATION
FIFE HOUSE

DRAWN BY :	SM	APPROVED BY :	
DATE :	25/06/2013	DATE :	
SCALE :	1:30	ORIGINAL DRAWING SIZE 841 x 594 - A1	
DRAWING No :	1202-(REEMA)-7551	REV.	

LH GABLE ELEVATION
(SCALE 1:40)

10 30 50
20 40

Do not scale from this drawing.
All dimensions must be checked on site by the Contractor prior to the commencement of any fabrication or building works.
Where applicable, dimensions and details are to be read in conjunction with specialist consultants' drawings and/or other specifications; any disparity is to be brought to the attention of Michael Dyson Associates Limited prior to the commencement of any fabrication or building works.
©This drawing is the property and copyright of Michael Dyson Associates Limited; It shall not be copied to any other party without the express written consent of an authorised director of Michael Dyson Associates Limited.

NOTES

REV	DATE	AMENDMENTS	BY	APR'D

West House, Meltham Road, Honley,
Huddersfield HD9 6LB
t. 01484 666888 f. 01484 664186
w. www.mdyson.co.uk

CLIENT :

RPS PLANNING & DEVELOPMENT

PROJECT :

STRUCTURAL SURVEY FOR 4NR REEMA FLATS BLOCKS IN MILTON KEYNES

TITLE :

TYPICAL EXISTING LH GABLE ELEVATION
FIFE HOUSE

DRAWN BY :	SM	APPROVED BY :	
DATE :	25/06/2013	DATE :	
SCALE :	1:40	ORIGINAL DRAWING SIZE 841 x 594 - A1	
DRAWING No :	1203-(REEMA)-7551	REV.	

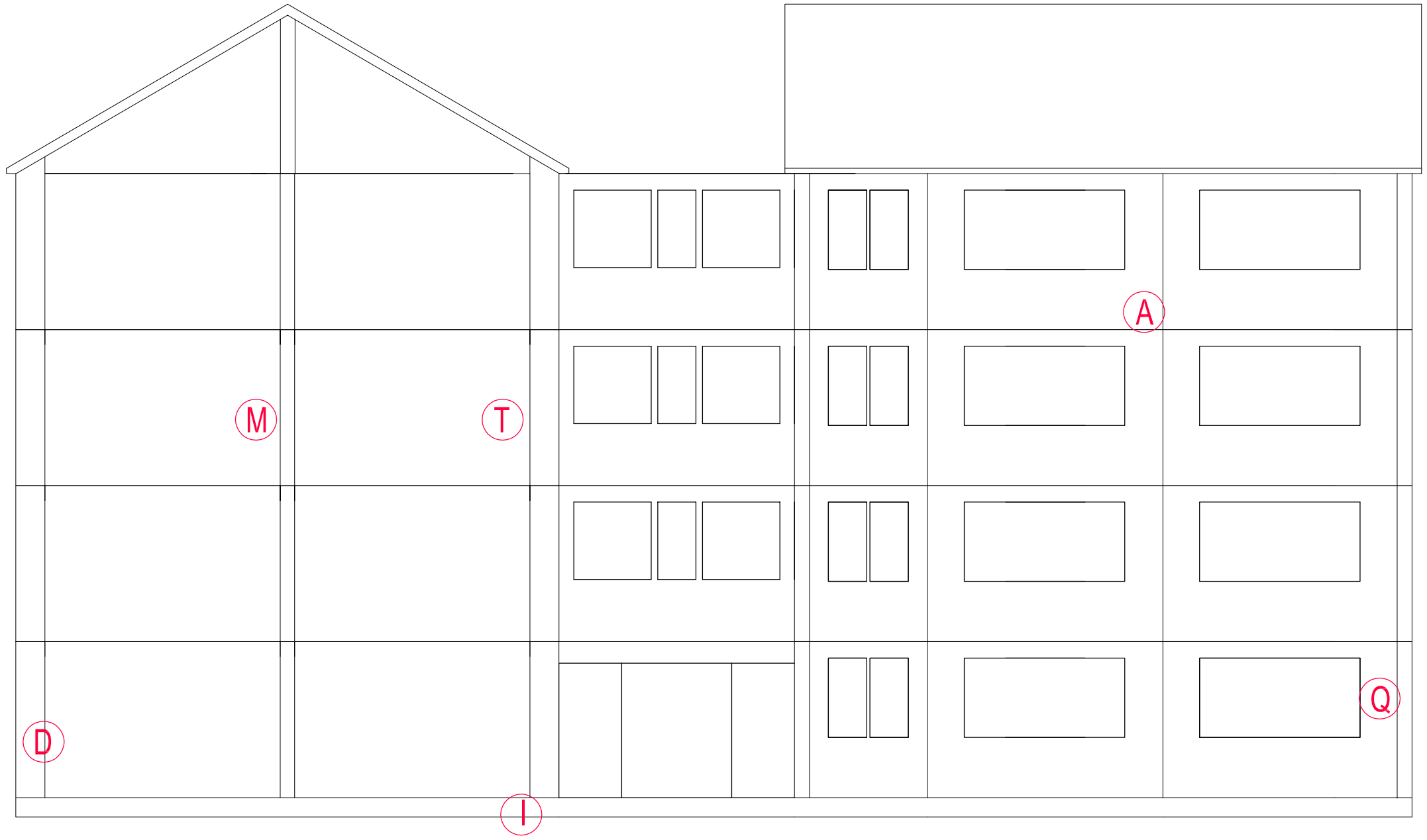

RH GABLE ELEVATION
(SCALE 1:40)

10 30 50
20 40

Do not scale from this drawing.
All dimensions must be checked on site by the Contractor prior to the commencement of any fabrication or building works.
Where applicable, dimensions and details are to be read in conjunction with specialist consultants' drawings and/or other specifications; any disparity is to be brought to the attention of Michael Dyson Associates Limited prior to the commencement of any fabrication or building works.
©This drawing is the property and copyright of Michael Dyson Associates Limited; It shall not be copied to any other party without the express written consent of an authorised director of Michael Dyson Associates Limited.

NOTES

REV	DATE	AMENDMENTS	BY	APR'D

West House, Meltham Road, Honley,
Huddersfield HD9 6LB
t. 01484 666888 f. 01484 664186
w. www.mdyson.co.uk

CLIENT :

RPS PLANNING & DEVELOPMENT

PROJECT :

STRUCTURAL SURVEY FOR 4NR REEMA FLATS BLOCKS IN MILTON KEYNES

TITLE :

TYPICAL RH GABLE ELEVATION
FIFE HOUSE

DRAWN BY :	SM	APPROVED BY :	
DATE :	25/06/2013	DATE :	
SCALE :	1:40	ORIGINAL DRAWING SIZE 841 x 594 - A1	
DRAWING No :	1204-(REEMA)-7551	REV.	

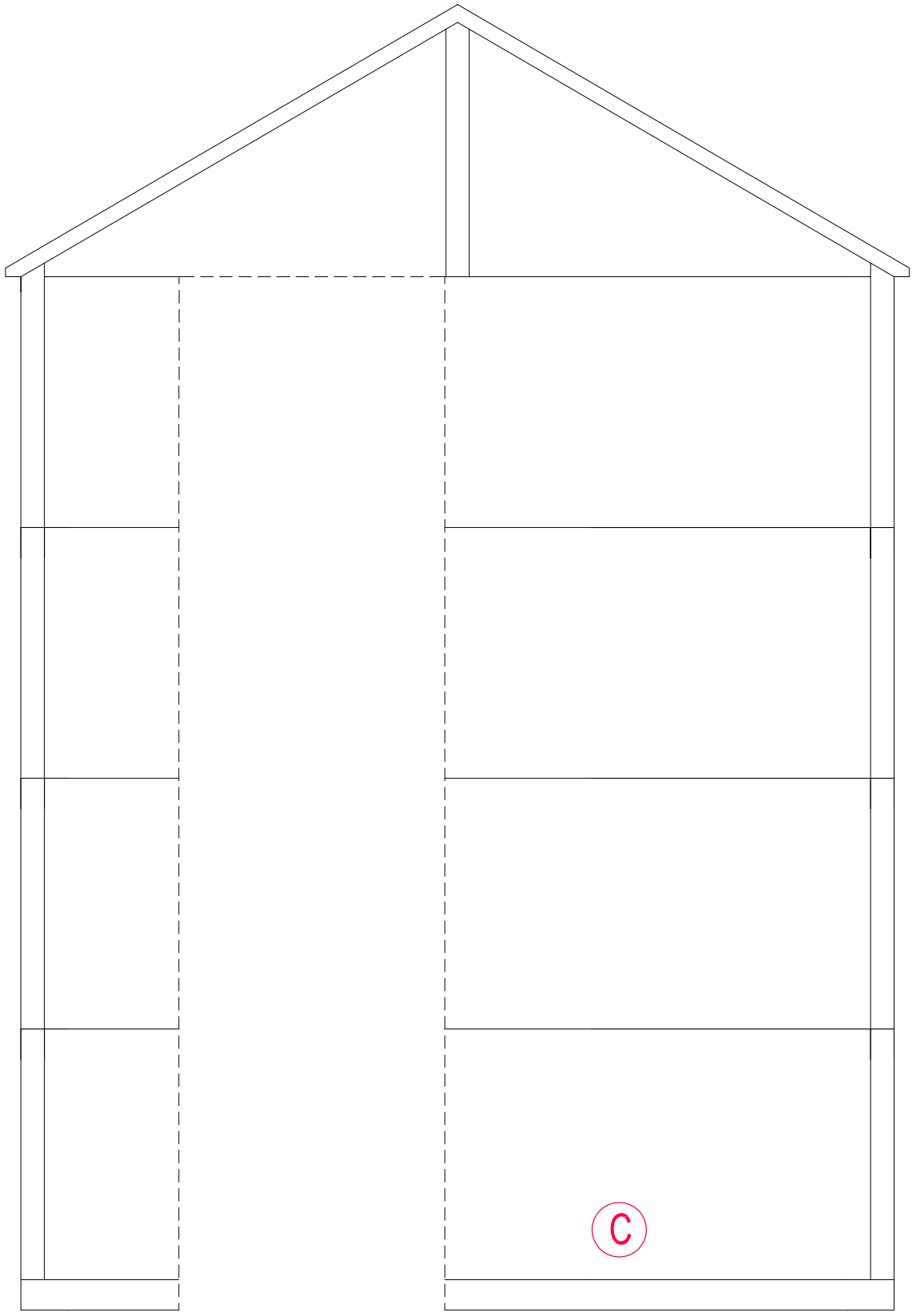

LINK GABLE ELEVATION
(SCALE 1:30)

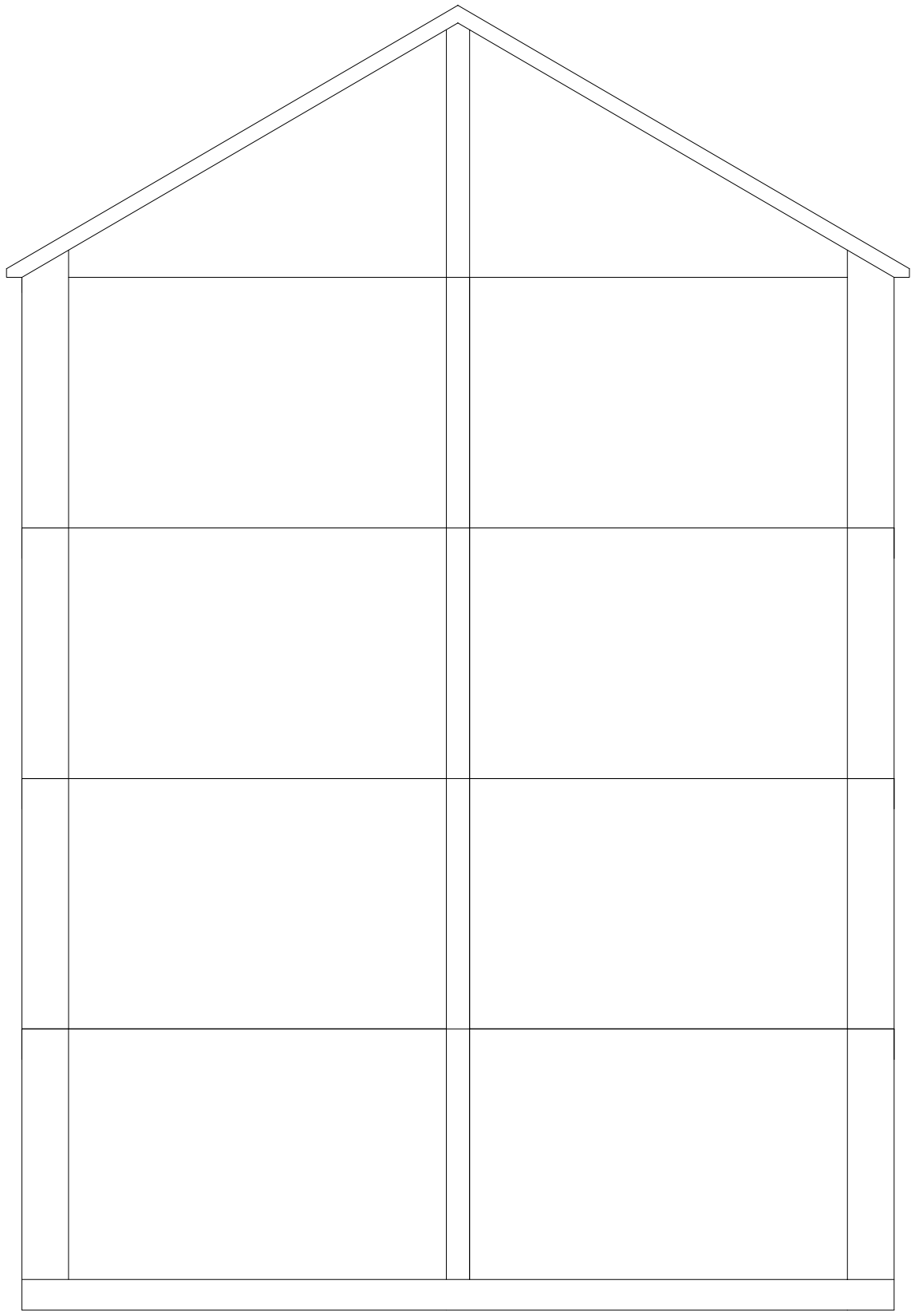

REAR LINK GABLE ELEVATION
(SCALE 1:30)

No Defects

10 30 50
20 40

Do not scale from this drawing.
All dimensions must be checked on site by the Contractor prior to the commencement of any fabrication or building works.
Where applicable, dimensions and details are to be read in conjunction with specialist consultants' drawings and/or other specifications; any disparity is to be brought to the attention of Michael Dyson Associates Limited prior to the commencement of any fabrication or building works.
©This drawing is the property and copyright of Michael Dyson Associates Limited; It shall not be copied to any other party without the express written consent of an authorised director of Michael Dyson Associates Limited.

NOTES

REV	DATE	AMENDMENTS	BY	APR'D

West House, Meltham Road, Honley,
Huddersfield HD9 6LB
t. 01484 666888 f. 01484 664186
w. www.mdyson.co.uk

CLIENT :
RPS PLANNING & DEVELOPMENT

PROJECT :
STRUCTURAL SURVEY FOR 4NR REEMA FLATS BLOCKS IN MILTON KEYNES

TITLE :
TYPICAL EXISTING LINK GABLE ELEVATION FIFE HOUSE

DRAWN BY :	SM	APPROVED BY :	
DATE :	25/06/2013	DATE :	
SCALE :	1:30	ORIGINAL DRAWING SIZE 841 x 594 - A1	
DRAWING No :	1205-(REEMA)-7551	REV.	

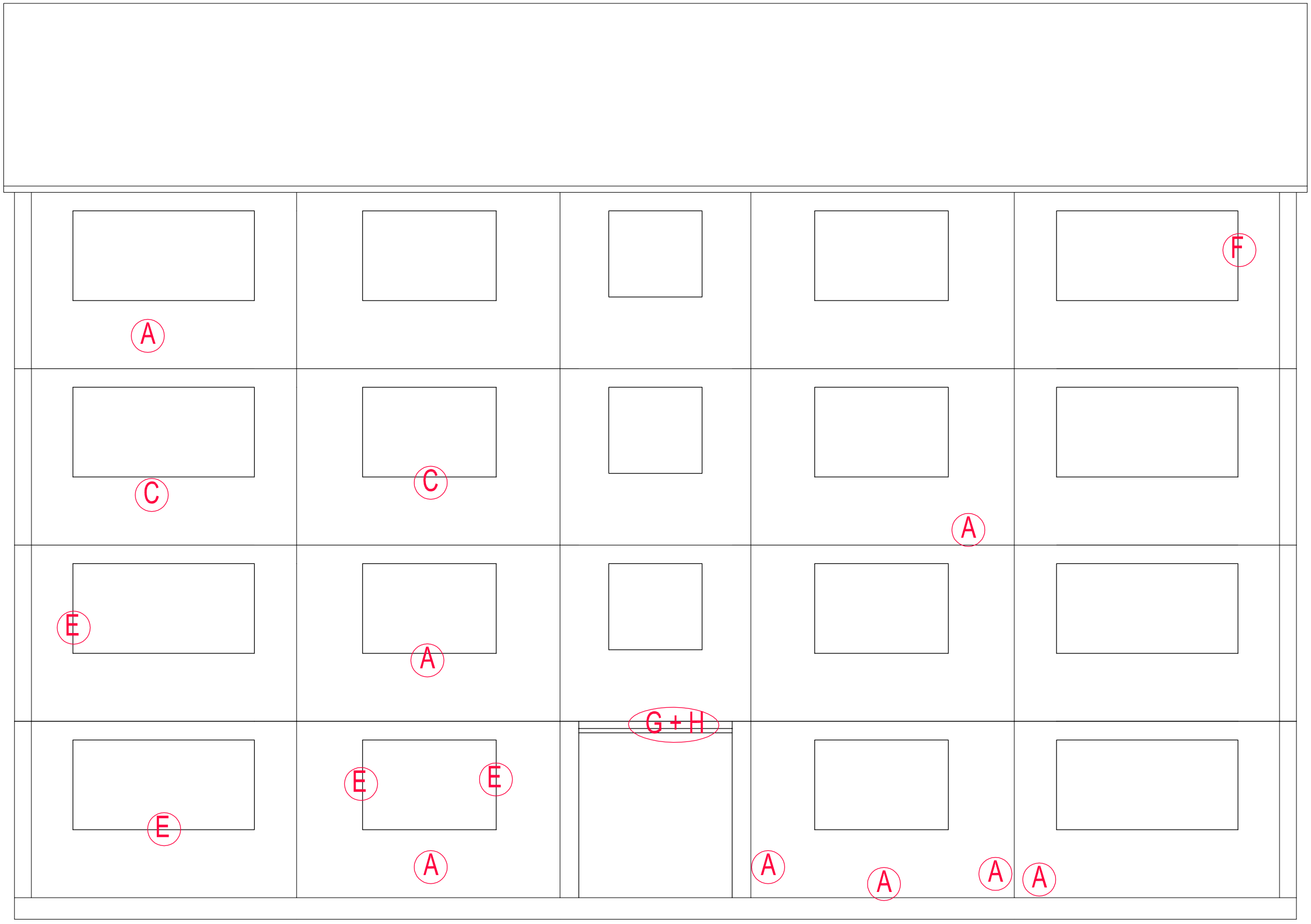

FRONT ELEVATION
(SCALE 1:30)

10 30 50
20 40

Do not scale from this drawing.
All dimensions must be checked on site by the Contractor prior to the commencement of any fabrication or building works.
Where applicable, dimensions and details are to be read in conjunction with specialist consultants' drawings and/or other specifications; any disparity is to be brought to the attention of Michael Dyson Associates Limited prior to the commencement of any fabrication or building works.
©This drawing is the property and copyright of Michael Dyson Associates Limited; It shall not be copied to any other party without the express written consent of an authorised director of Michael Dyson Associates Limited.

NOTES

REV	DATE	AMENDMENTS	BY	APR'D

West House, Meltham Road, Honley,
Huddersfield HD9 6LB
t. 01484 666888 f. 01484 664186
w. www.mdyson.co.uk

CLIENT :

RPS PLANNING & DEVELOPMENT

PROJECT :

STRUCTURAL SURVEY FOR 4NR REEMA FLATS BLOCKS IN MILTON KEYNES

TITLE :

TYPICAL EXISTING FRONT ELEVATION
LANARK HOUSE

DRAWN BY :	SM	APPROVED BY :	
DATE :	25/06/2013	DATE :	
SCALE :	1:30	ORIGINAL DRAWING SIZE 841 x 594 - A1	
DRAWING No :	1001-(REEMA)-7551	REV.	

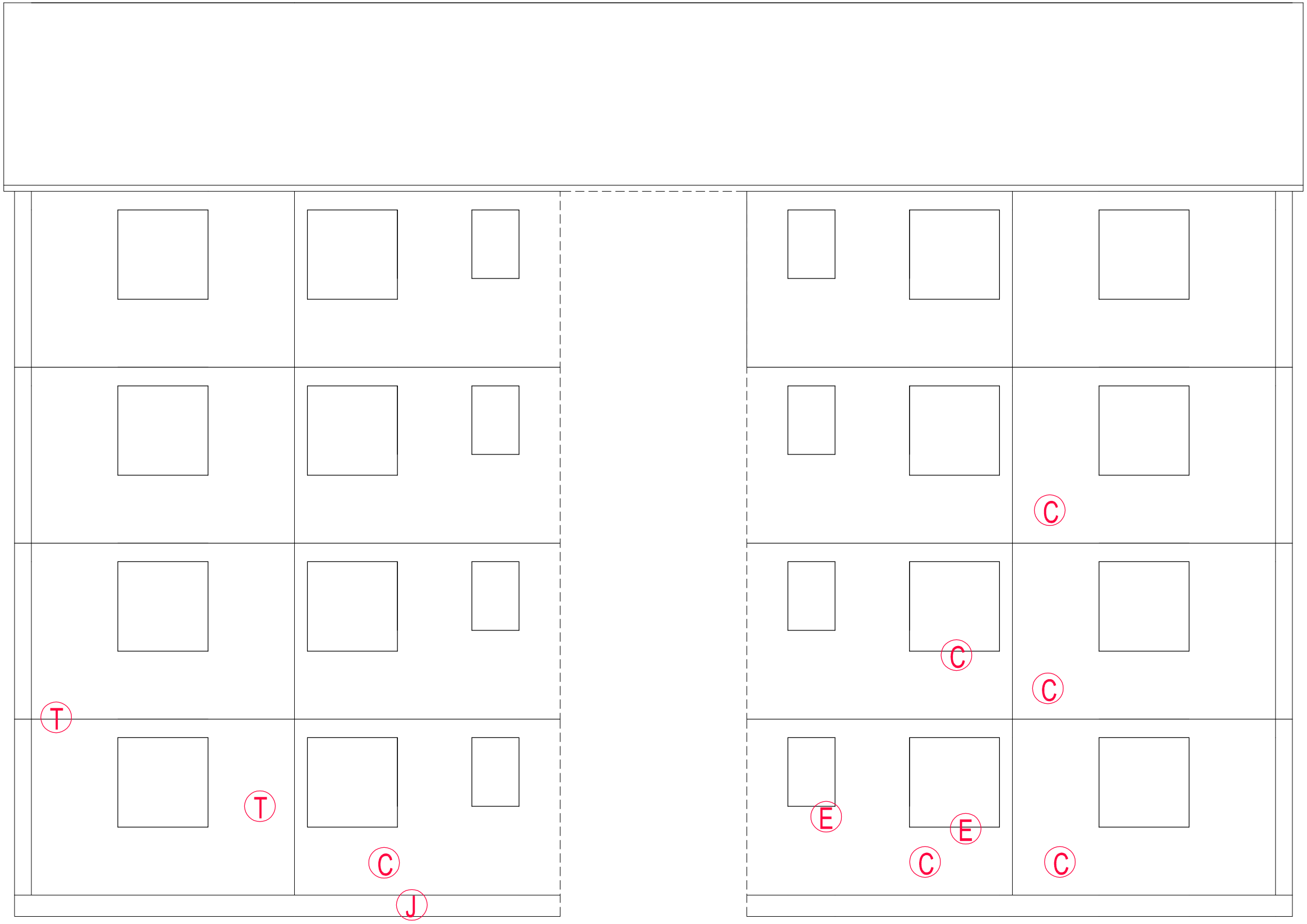

REAR ELEVATION
(SCALE 1:30)

10 30 50
20 40

Do not scale from this drawing.
All dimensions must be checked on site by the Contractor prior to the commencement of any fabrication or building works.
Where applicable, dimensions and details are to be read in conjunction with specialist consultants' drawings and/or other specifications; any disparity is to be brought to the attention of Michael Dyson Associates Limited prior to the commencement of any fabrication or building works.
©This drawing is the property and copyright of Michael Dyson Associates Limited; It shall not be copied to any other party without the express written consent of an authorised director of Michael Dyson Associates Limited.

NOTES

REV	DATE	AMENDMENTS	BY	APR'D

West House, Meltham Road, Honley,
Huddersfield HD9 6LB
t. 01484 666888 f. 01484 664186
w. www.mdyson.co.uk

CLIENT :
RPS PLANNING & DEVELOPMENT

PROJECT :
STRUCTURAL SURVEY FOR 4NR REEMA FLATS BLOCKS IN MILTON KEYNES

TITLE :
TYPICAL EXISTING REAR ELEVATION
LANARK HOUSE

DRAWN BY :	SM	APPROVED BY :	
DATE :	25/06/2013	DATE :	
SCALE :	1:30	ORIGINAL DRAWING SIZE 841 x 594 - A1	
DRAWING No :	1002-(REEMA)-7551	REV.	

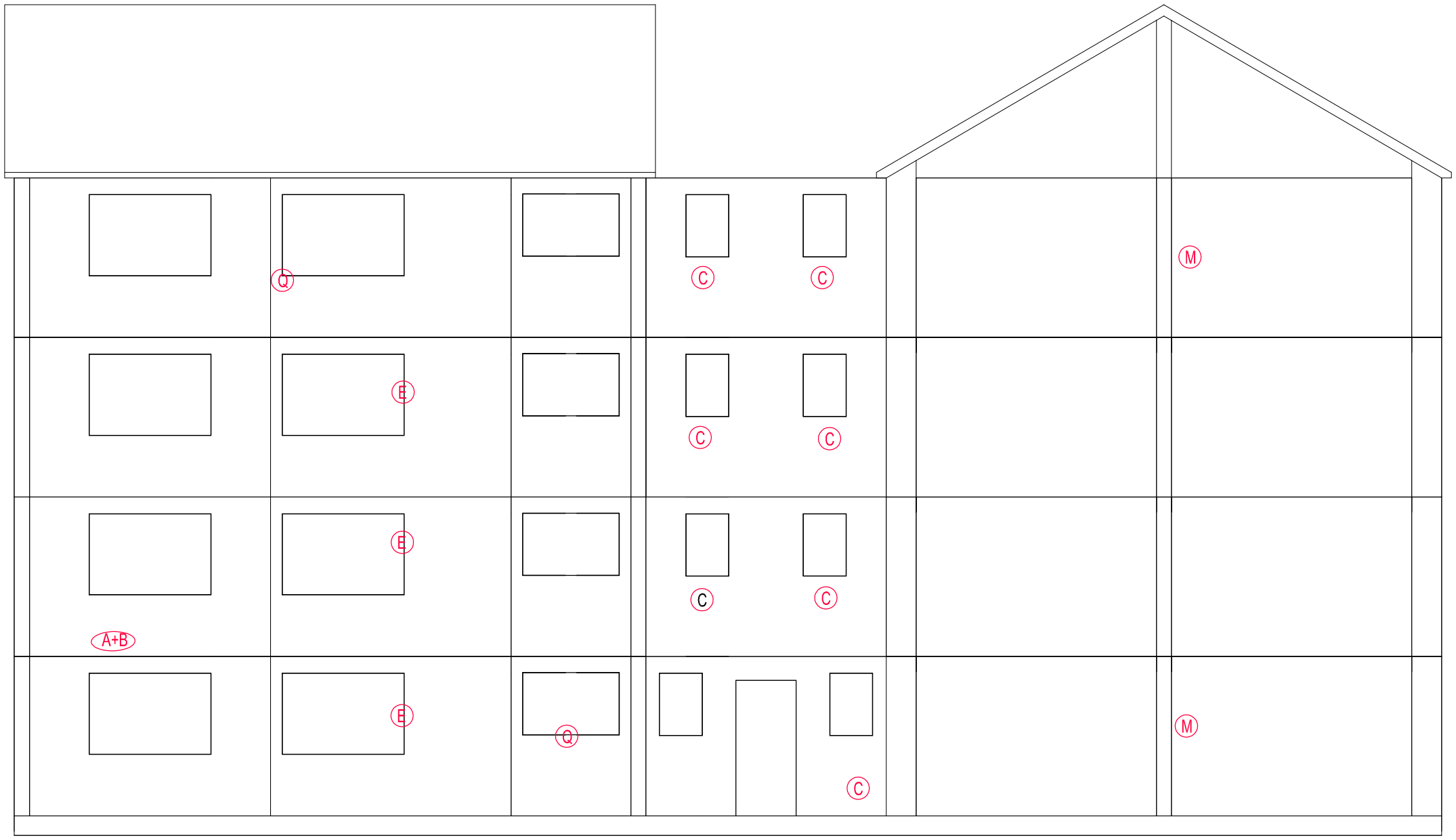

LH GABLE ELEVATION
(SCALE 1:40)

10 30 50
20 40

Do not scale from this drawing.
All dimensions must be checked on site by the Contractor prior to the commencement of any fabrication or building works.
Where applicable, dimensions and details are to be read in conjunction with specialist consultants' drawings and/or other specifications; any disparity is to be brought to the attention of Michael Dyson Associates Limited prior to the commencement of any fabrication or building works.
©This drawing is the property and copyright of Michael Dyson Associates Limited; It shall not be copied to any other party without the express written consent of an authorised director of Michael Dyson Associates Limited.

NOTES

REV	DATE	AMENDMENTS	BY	APR'D

West House, Meltham Road, Honley,
Huddersfield HD9 6LB
t. 01484 666888 f. 01484 664186
w. www.mdyson.co.uk

CLIENT :
RPS PLANNING & DEVELOPMENT

PROJECT :
STRUCTURAL SURVEY FOR 4NR REEMA FLATS BLOCKS IN MILTON KEYNES

TITLE :
TYPICAL EXISTING LH GABLE ELEVATION
LANARK HOUSE

DRAWN BY :	SM	APPROVED BY :	
DATE :	25/06/2013	DATE :	
SCALE :	1:40	ORIGINAL DRAWING SIZE 841 x 594 - A1	
DRAWING No :	1003-(REEMA)-7551	REV.	

RH GABLE ELEVATION
(SCALE 1:40)

10 30 50
20 40

Do not scale from this drawing.
All dimensions must be checked on site by the Contractor prior to the commencement of any fabrication or building works.
Where applicable, dimensions and details are to be read in conjunction with specialist consultants' drawings and/or other specifications; any disparity is to be brought to the attention of Michael Dyson Associates Limited prior to the commencement of any fabrication or building works.
©This drawing is the property and copyright of Michael Dyson Associates Limited; It shall not be copied to any other party without the express written consent of an authorised director of Michael Dyson Associates Limited.

NOTES

REV	DATE	AMENDMENTS	BY	APR'D

West House, Meltham Road, Honley,
Huddersfield HD9 6LB
t. 01484 666888 f. 01484 664186
w. www.mdyson.co.uk

CLIENT :
RPS PLANNING & DEVELOPMENT

PROJECT :
STRUCTURAL SURVEY FOR 4NR REEMA FLATS BLOCKS IN MILTON KEYNES

TITLE :
TYPICAL RH GABLE ELEVATION
LANARK HOUSE

DRAWN BY :	SM	APPROVED BY :	
DATE :	25/06/2013	DATE :	
SCALE :	1:40	ORIGINAL DRAWING SIZE 841 x 594 - A1	
DRAWING No :	1004-(REEMA)-7551	REV.	

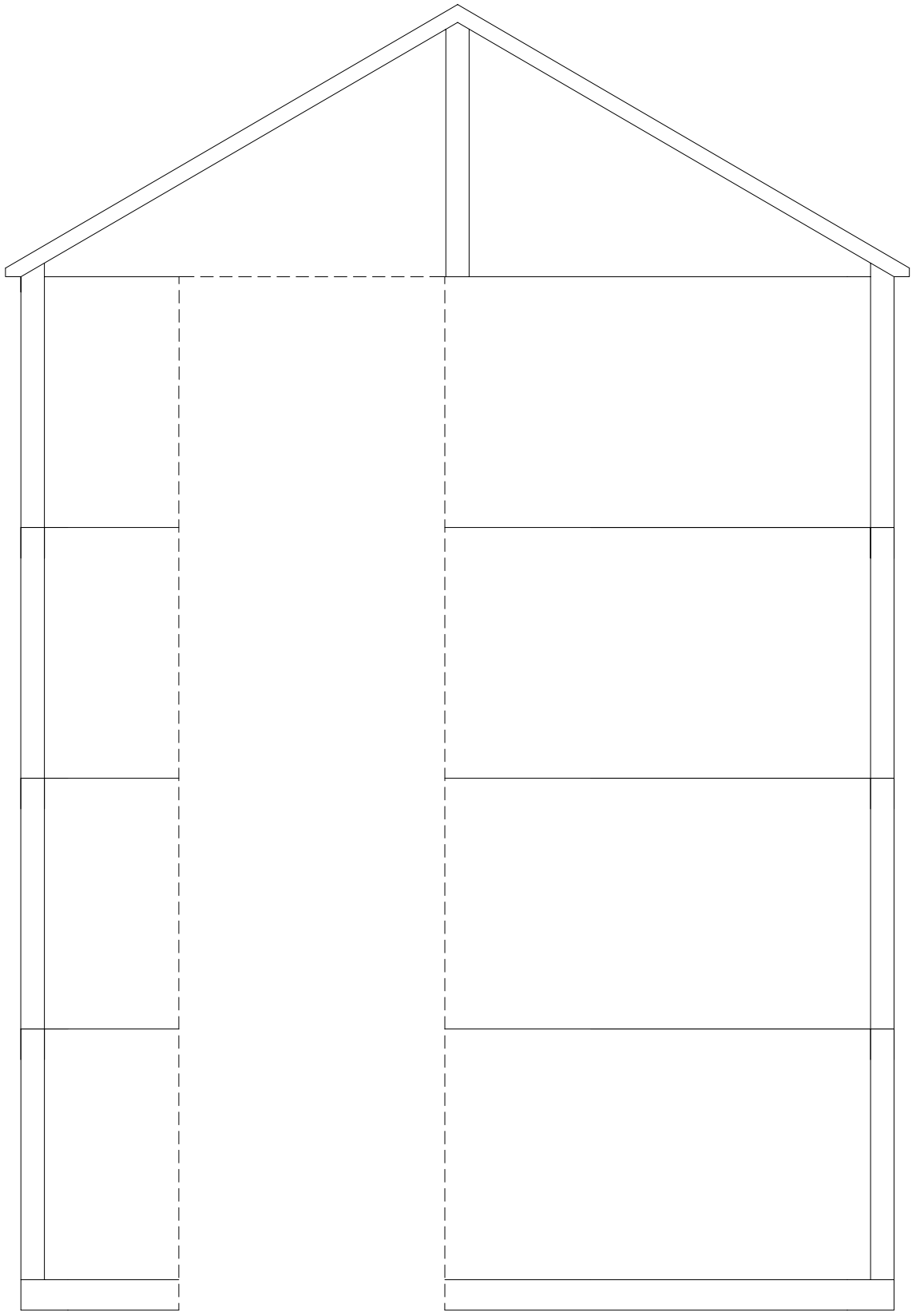

LINK GABLE ELEVATION
(SCALE 1:30)

No Defects

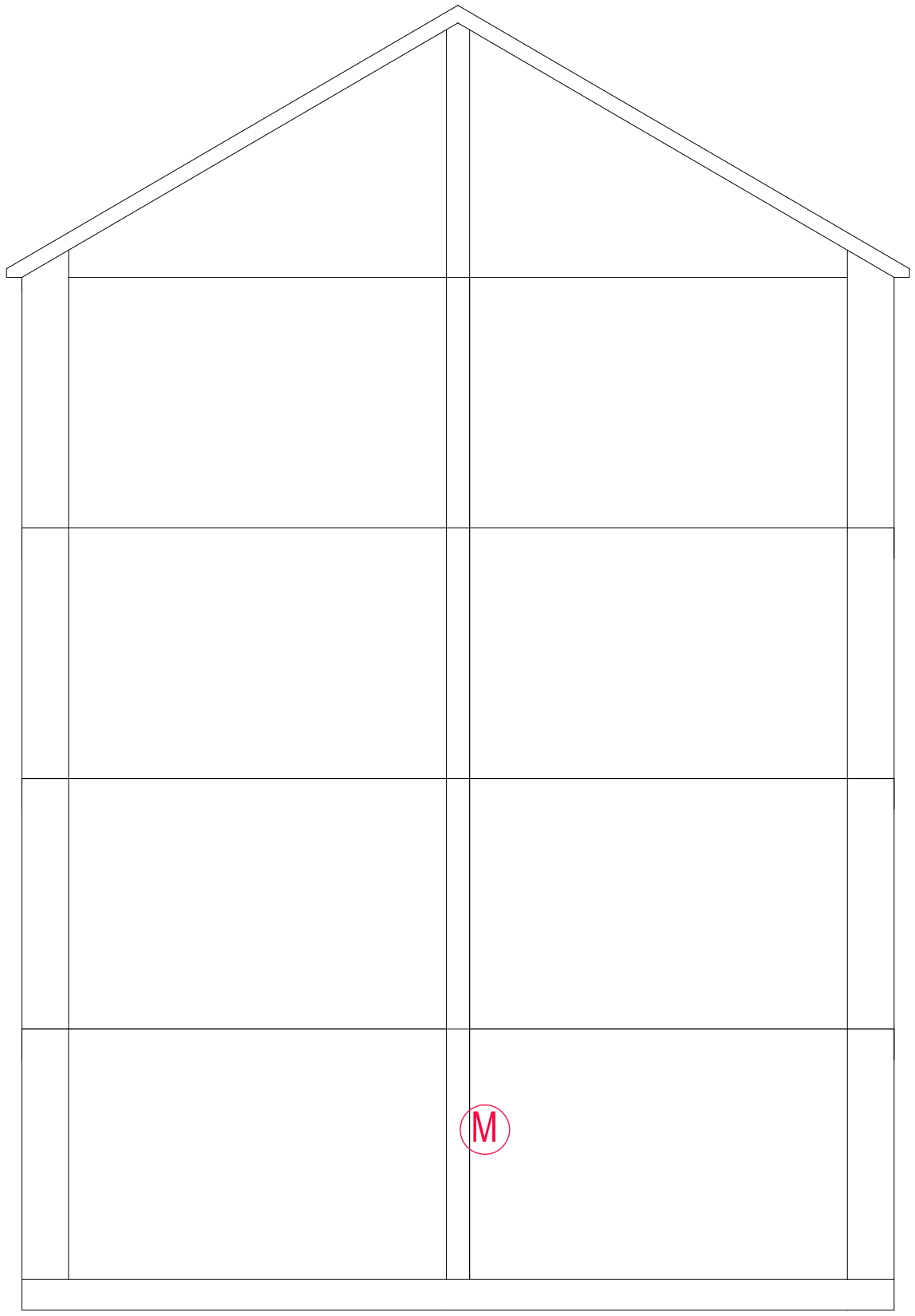

REAR LINK GABLE ELEVATION
(SCALE 1:30)

10 30 50
20 40

Do not scale from this drawing.
All dimensions must be checked on site by the Contractor prior to the commencement of any fabrication or building works.
Where applicable, dimensions and details are to be read in conjunction with specialist consultants' drawings and/or other specifications; any disparity is to be brought to the attention of Michael Dyson Associates Limited prior to the commencement of any fabrication or building works.
©This drawing is the property and copyright of Michael Dyson Associates Limited; It shall not be copied to any other party without the express written consent of an authorised director of Michael Dyson Associates Limited.

NOTES

REV	DATE	AMENDMENTS	BY	APR'D

West House, Meltham Road, Honley,
Huddersfield HD9 6LB
t. 01484 666888 f. 01484 664186
w. www.mdyson.co.uk

CLIENT :

RPS PLANNING & DEVELOPMENT

PROJECT :

STRUCTURAL SURVEY FOR 4NR REEMA FLATS BLOCKS IN MILTON KEYNES

TITLE :

TYPICAL EXISTING LINK GABLE ELEVATION
LANARK HOUSE

DRAWN BY :	SM	APPROVED BY :	
DATE :	25/06/2013	DATE :	
SCALE :	1:30	ORIGINAL DRAWING SIZE 841 x 594 - A1	
DRAWING No :	1005-(REEMA)-7551	REV.	

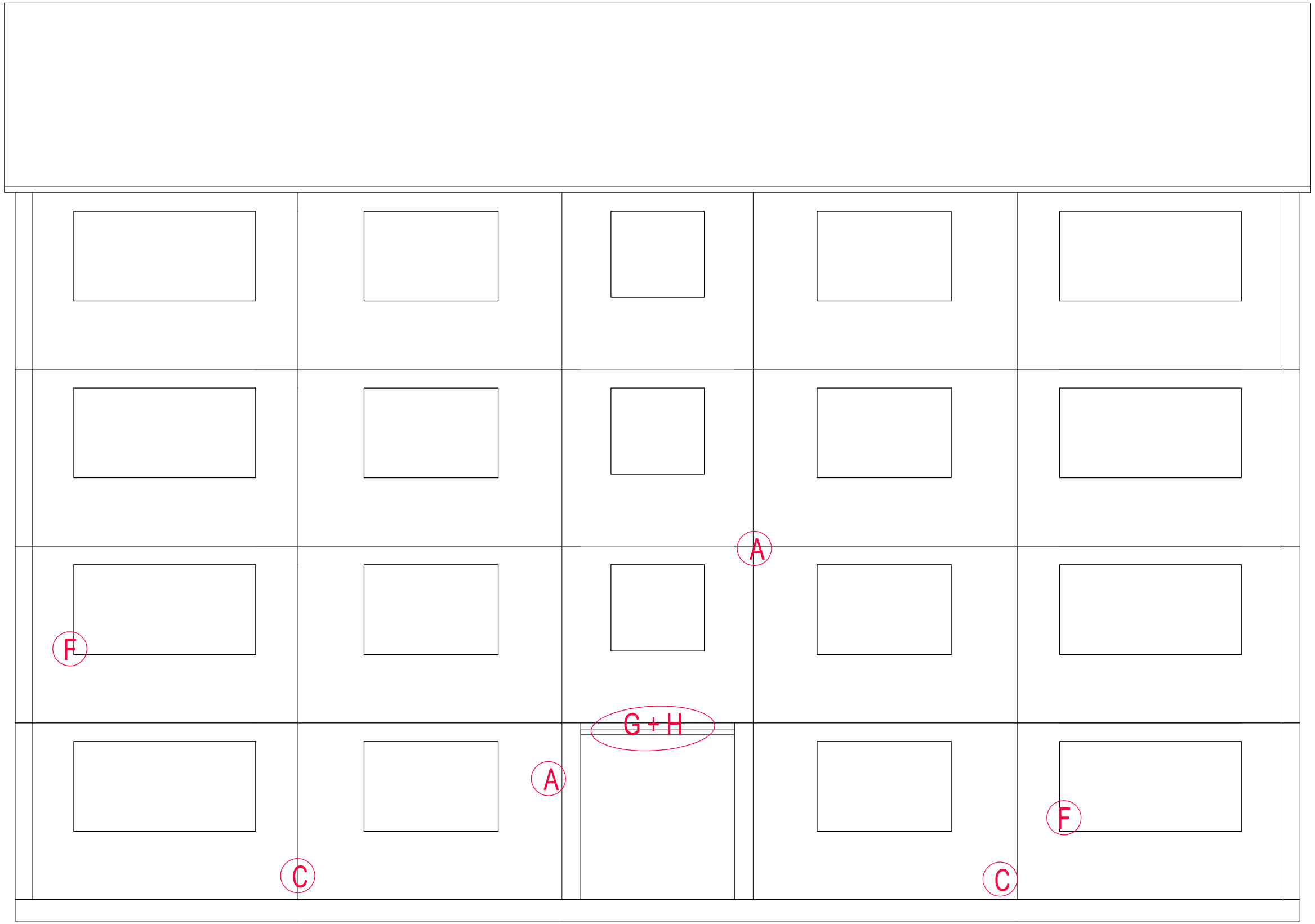

FRONT ELEVATION
(SCALE 1:30)

10 30 50
20 40

Do not scale from this drawing.
All dimensions must be checked on site by the Contractor prior to the commencement of any fabrication or building works.
Where applicable, dimensions and details are to be read in conjunction with specialist consultants' drawings and/or other specifications; any disparity is to be brought to the attention of Michael Dyson Associates Limited prior to the commencement of any fabrication or building works.
©This drawing is the property and copyright of Michael Dyson Associates Limited; It shall not be copied to any other party without the express written consent of an authorised director of Michael Dyson Associates Limited.

NOTES

REV	DATE	AMENDMENTS	BY	APR'D

West House, Meltham Road, Honley,
Huddersfield HD9 6LB
t. 01484 666888 f. 01484 664186
w. www.mdyson.co.uk

CLIENT :
RPS PLANNING & DEVELOPMENT

PROJECT :
STRUCTURAL SURVEY FOR 4NR REEMA FLATS BLOCKS IN MILTON KEYNES

TITLE :
TYPICAL EXISTING FRONT ELEVATION
LEWES HOUSE

DRAWN BY :	SM	APPROVED BY :	
DATE :	25/06/2013	DATE :	
SCALE :	1:30	ORIGINAL DRAWING SIZE 841 x 594 - A1	
DRAWING No :	1301-(REEMA)-7551	REV.	

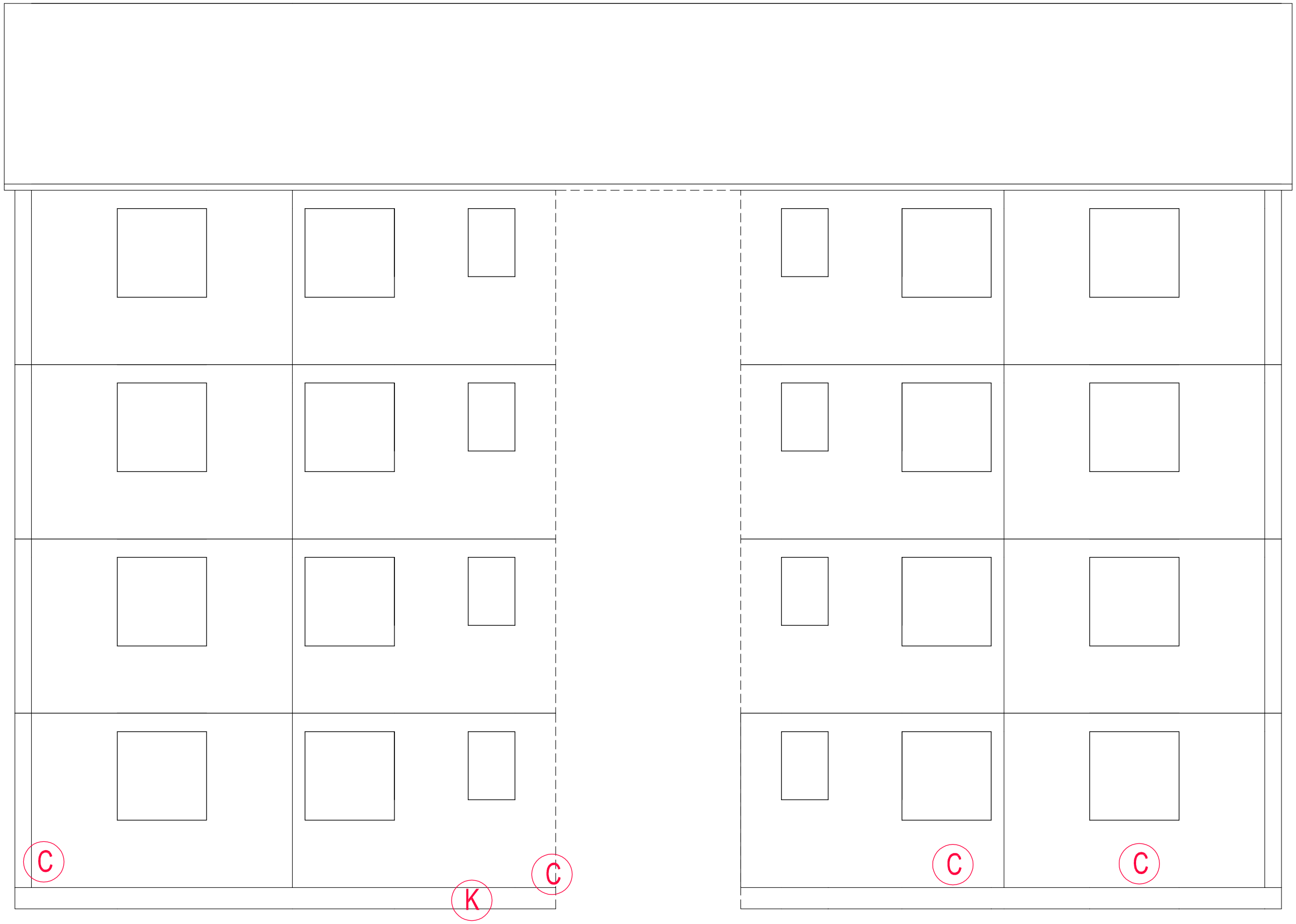

REAR ELEVATION
(SCALE 1:30)

10 30 50
20 40

Do not scale from this drawing.
All dimensions must be checked on site by the Contractor prior to the commencement of any fabrication or building works.
Where applicable, dimensions and details are to be read in conjunction with specialist consultants' drawings and/or other specifications; any disparity is to be brought to the attention of Michael Dyson Associates Limited prior to the commencement of any fabrication or building works.
©This drawing is the property and copyright of Michael Dyson Associates Limited; It shall not be copied to any other party without the express written consent of an authorised director of Michael Dyson Associates Limited.

NOTES

REV	DATE	AMENDMENTS	BY	APR'D

West House, Meltham Road, Honley,
Huddersfield HD9 6LB
t. 01484 666888 f. 01484 664186
w. www.mdyson.co.uk

CLIENT :

RPS PLANNING & DEVELOPMENT

PROJECT :

STRUCTURAL SURVEY FOR 4NR REEMA FLATS BLOCKS IN MILTON KEYNES

TITLE :

TYPICAL EXISTING REAR ELEVATION
LEWES HOUSE

DRAWN BY :	SM	APPROVED BY :	
DATE :	25/06/2013	DATE :	
SCALE :	1:30	ORIGINAL DRAWING SIZE 841 x 594 - A1	
DRAWING No :	1302-(REEMA)-7551	REV.	

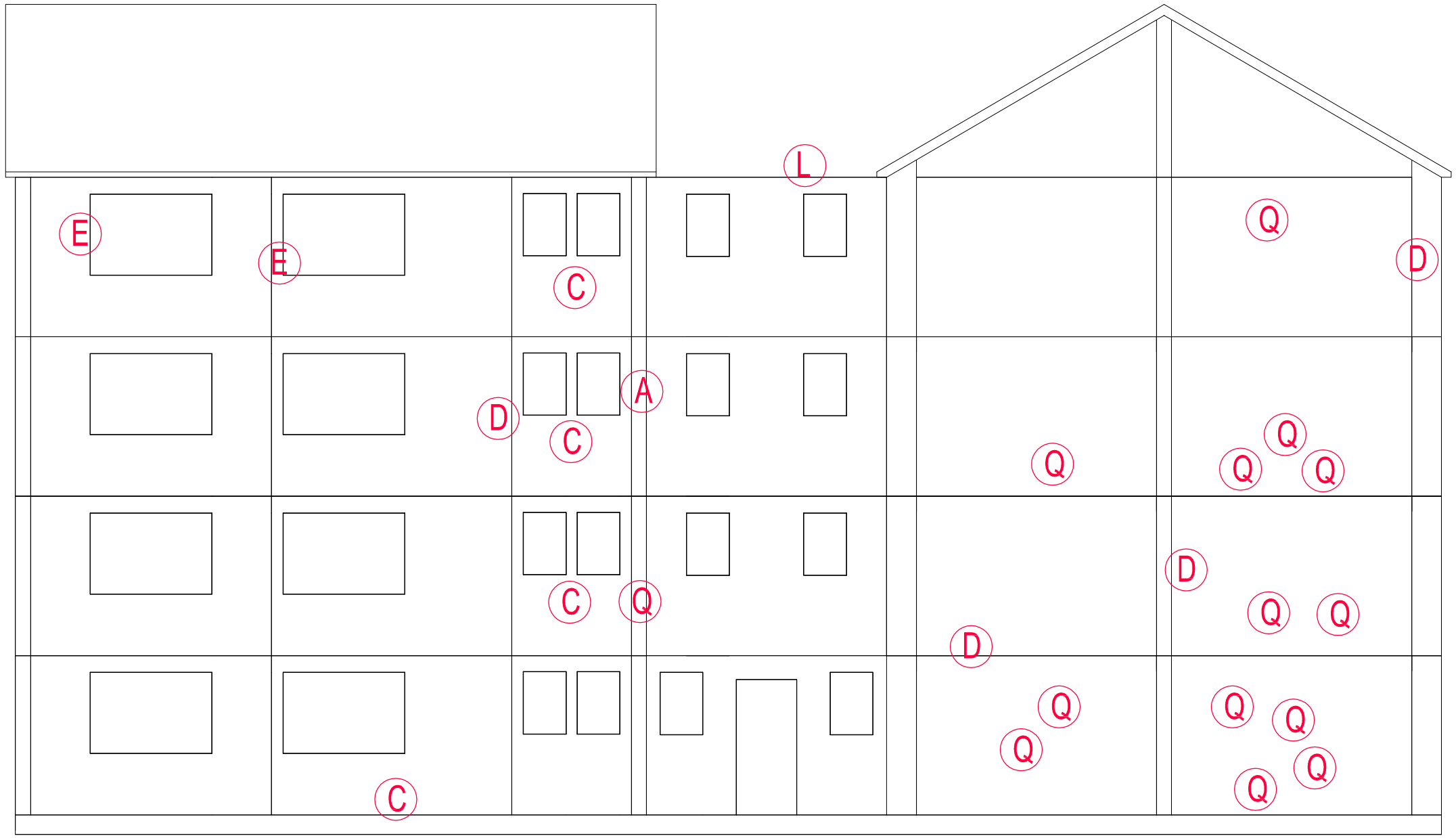

LH GABLE ELEVATION
(SCALE 1:40)

10 30 50
20 40

Do not scale from this drawing.
All dimensions must be checked on site by the Contractor prior to the commencement of any fabrication or building works.
Where applicable, dimensions and details are to be read in conjunction with specialist consultants' drawings and/or other specifications; any disparity is to be brought to the attention of Michael Dyson Associates Limited prior to the commencement of any fabrication or building works.
©This drawing is the property and copyright of Michael Dyson Associates Limited; It shall not be copied to any other party without the express written consent of an authorised director of Michael Dyson Associates Limited.

NOTES

REV	DATE	AMENDMENTS	BY	APR'D

West House, Meltham Road, Honley,
Huddersfield HD9 6LB
t. 01484 666888 f. 01484 664186
w. www.mdyson.co.uk

CLIENT :
RPS PLANNING & DEVELOPMENT

PROJECT :
STRUCTURAL SURVEY FOR 4NR REEMA FLATS BLOCKS IN MILTON KEYNES

TITLE :
TYPICAL EXISTING LH GABLE ELEVATION
LEWES HOUSE

DRAWN BY :	SM	APPROVED BY :	
DATE :	25/06/2013	DATE :	
SCALE :	1:40	ORIGINAL DRAWING SIZE 841 x 594 - A1	
DRAWING No :	1303-(REEMA)-7551	REV.	

RH GABLE ELEVATION
(SCALE 1:40)

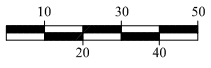

Do not scale from this drawing.
All dimensions must be checked on site by the Contractor prior to the commencement of any fabrication or building works.
Where applicable, dimensions and details are to be read in conjunction with specialist consultants' drawings and/or other specifications; any disparity is to be brought to the attention of Michael Dyson Associates Limited prior to the commencement of any fabrication or building works.
©This drawing is the property and copyright of Michael Dyson Associates Limited; It shall not be copied to any other party without the express written consent of an authorised director of Michael Dyson Associates Limited.

NOTES

REV	DATE	AMENDMENTS	BY	APR'D

West House, Meltham Road, Honley,
Huddersfield HD9 6LB
t. 01484 666888 f. 01484 664186
w. www.mdyson.co.uk

CLIENT :

RPS PLANNING & DEVELOPMENT

PROJECT :

STRUCTURAL SURVEY FOR 4NR REEMA FLATS BLOCKS IN MILTON KEYNES

TITLE :

TYPICAL EXISTING RH GABLE ELEVATION
LEWES HOUSE

DRAWN BY :	SM	APPROVED BY :	
DATE :	25/06/2013	DATE :	
SCALE :	1:40	ORIGINAL DRAWING SIZE 841 x 594 - A1	
DRAWING No :	1304-(REEMA)-7551	REV.	

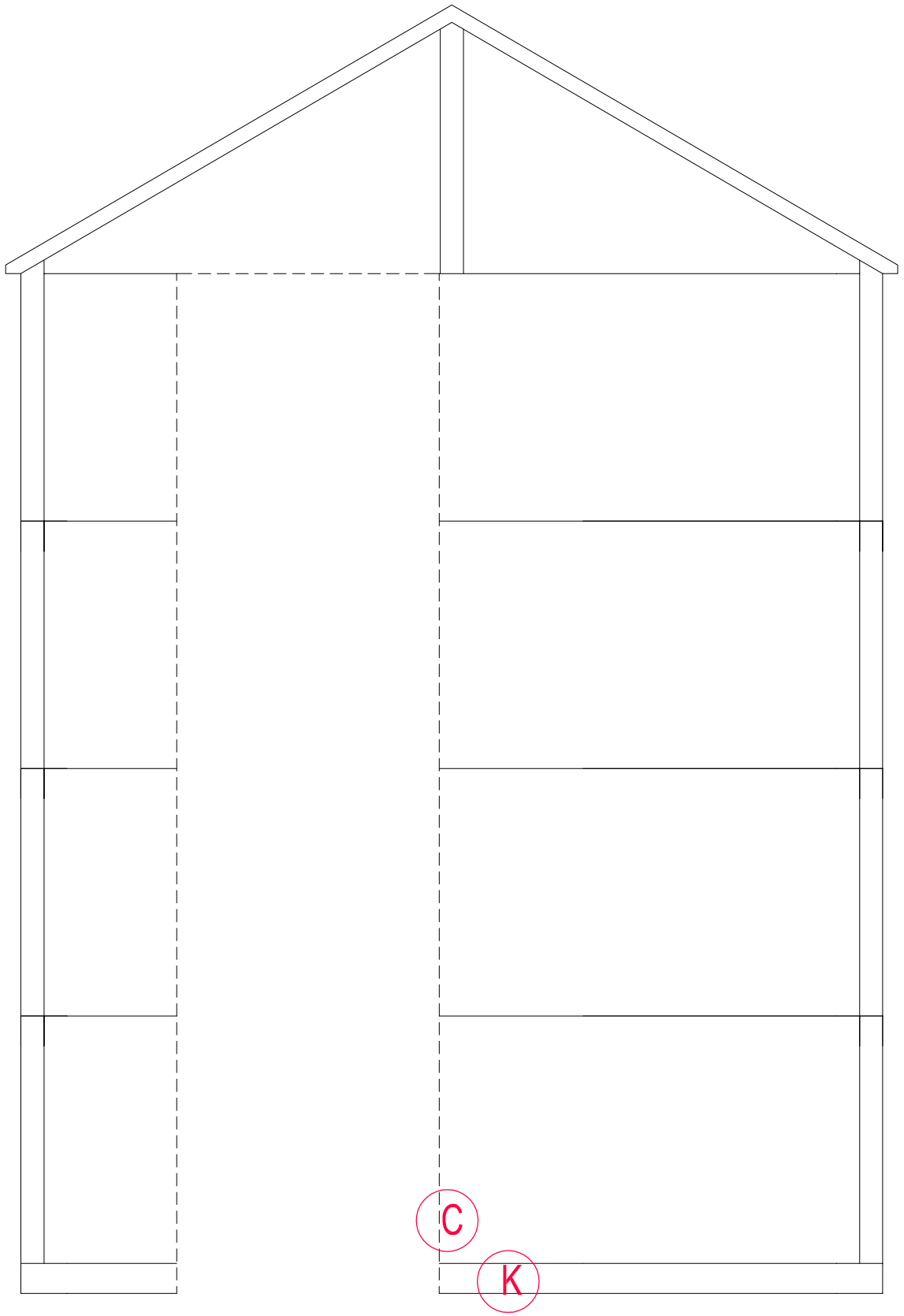

LINK GABLE ELEVATION
(SCALE 1:30)

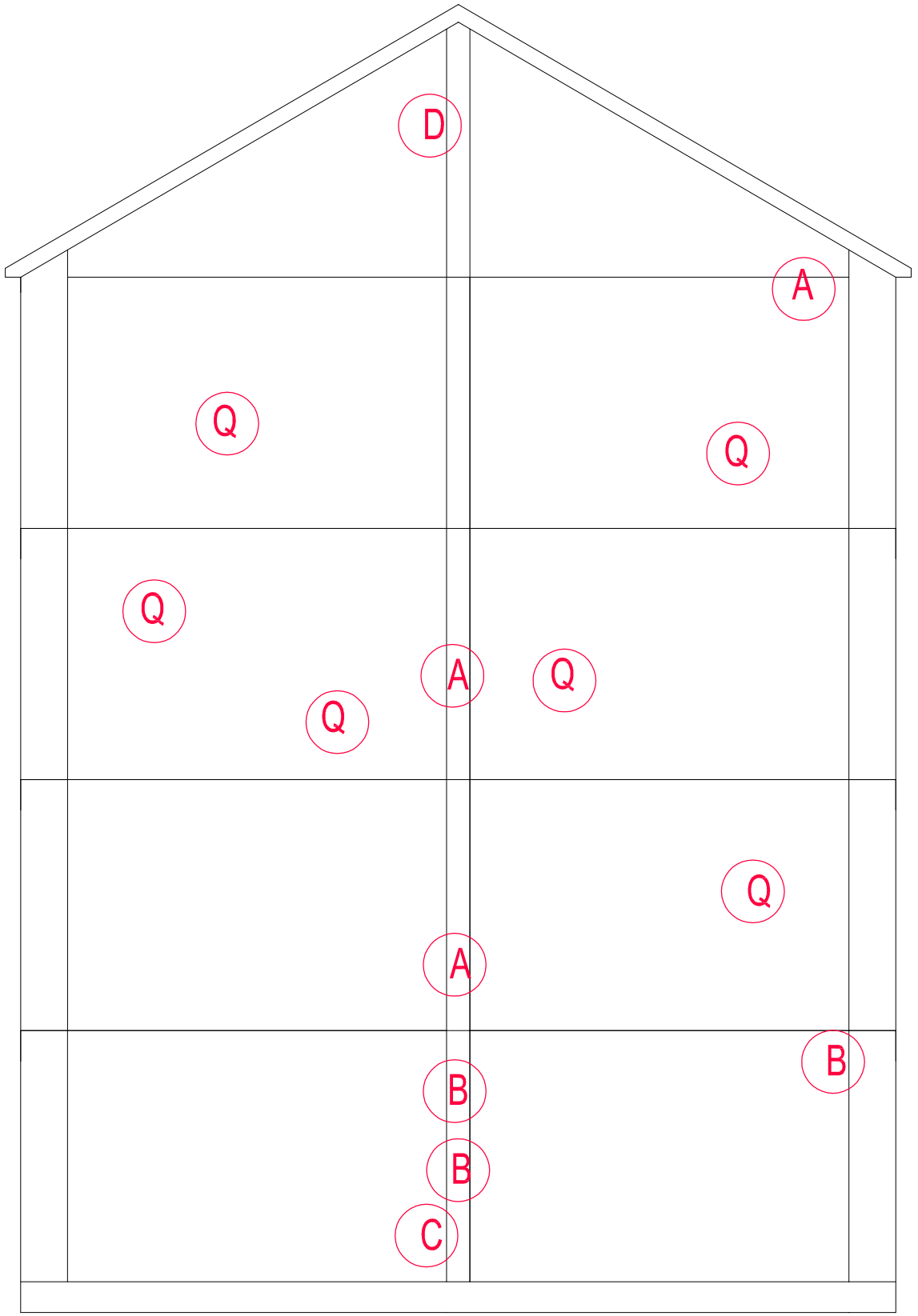

REAR LINK GABLE ELEVATION
(SCALE 1:30)

10 30 50
20 40

Do not scale from this drawing.
All dimensions must be checked on site by the Contractor prior to the commencement of any fabrication or building works.
Where applicable, dimensions and details are to be read in conjunction with specialist consultants' drawings and/or other specifications; any disparity is to be brought to the attention of Michael Dyson Associates Limited prior to the commencement of any fabrication or building works.
©This drawing is the property and copyright of Michael Dyson Associates Limited; It shall not be copied to any other party without the express written consent of an authorised director of Michael Dyson Associates Limited.

NOTES

REV	DATE	AMENDMENTS	BY	APR'D

West House, Meltham Road, Honley,
Huddersfield HD9 6LB
t. 01484 666888 f. 01484 664186
w. www.mdyson.co.uk

CLIENT :
RPS PLANNING & DEVELOPMENT

PROJECT :
STRUCTURAL SURVEY FOR 4NR REEMA FLATS BLOCKS IN MILTON KEYNES

TITLE :
TYPICAL EXISTING LINK GABLE ELEVATIONS LEWES HOUSE

DRAWN BY :	SM	APPROVED BY :	
DATE :	25/06/2013	DATE :	
SCALE :	1:30	ORIGINAL DRAWING SIZE 841 x 594 - A1	
DRAWING No :	1305-(REEMA)-7551	REV.	

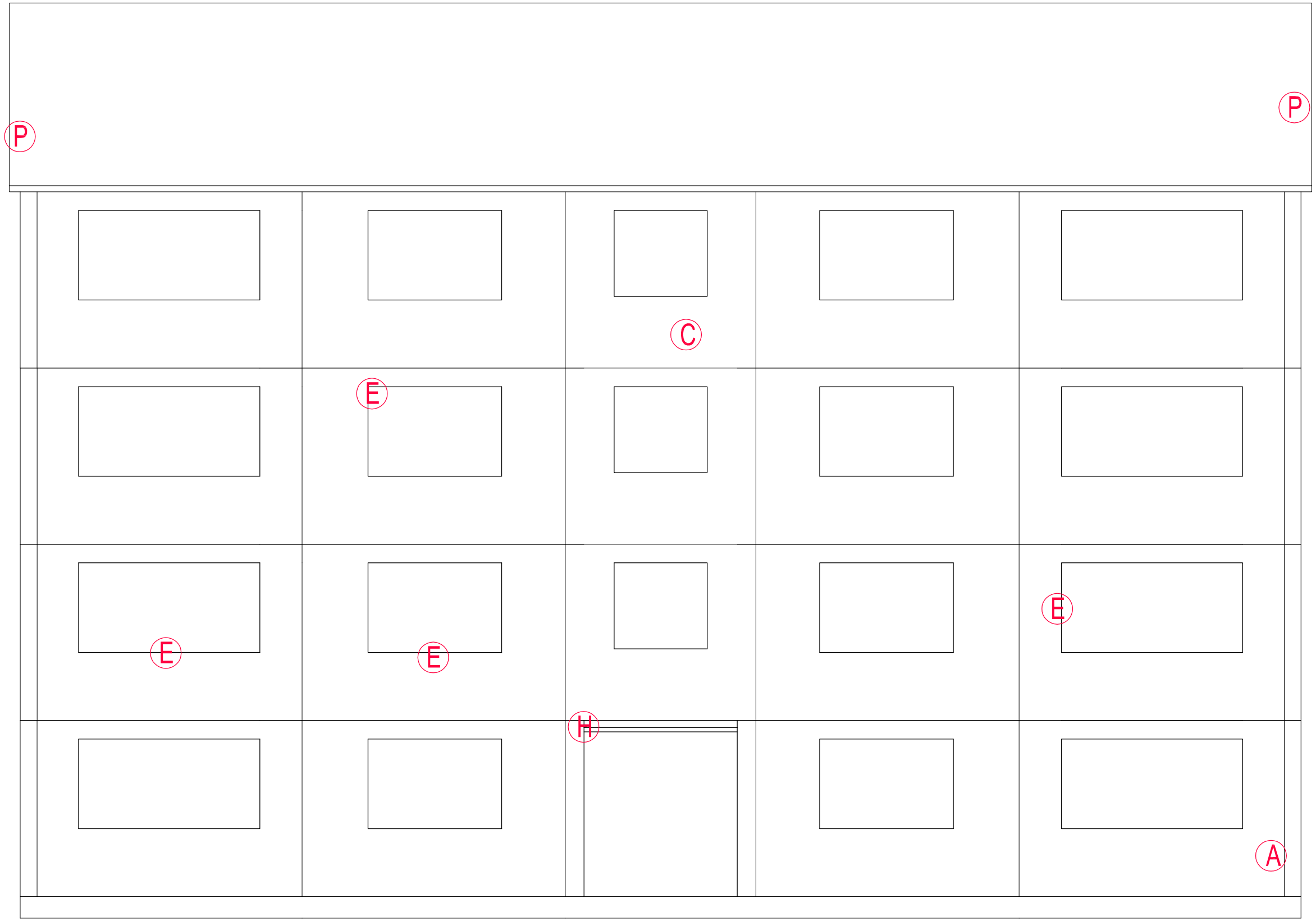

FRONT ELEVATION
(SCALE 1:30)

10 30 50
20 40

Do not scale from this drawing.
All dimensions must be checked on site by the Contractor prior to the commencement of any fabrication or building works.
Where applicable, dimensions and details are to be read in conjunction with specialist consultants' drawings and/or other specifications; any disparity is to be brought to the attention of Michael Dyson Associates Limited prior to the commencement of any fabrication or building works.
©This drawing is the property and copyright of Michael Dyson Associates Limited; It shall not be copied to any other party without the express written consent of an authorised director of Michael Dyson Associates Limited.

NOTES

REV	DATE	AMENDMENTS	BY	APR'D

West House, Meltham Road, Honley,
Huddersfield HD9 6LB
t. 01484 666888 f. 01484 664186
w. www.mdyson.co.uk

CLIENT :
RPS PLANNING & DEVELOPMENT

PROJECT :
STRUCTURAL SURVEY FOR 4NR REEMA FLATS BLOCKS IN MILTON KEYNES

TITLE :
TYPICAL EXISTING FRONT ELEVATION
PEMBROKE HOUSE

DRAWN BY :	SM	APPROVED BY :	
DATE :	25/06/2013	DATE :	
SCALE :	1:30	ORIGINAL DRAWING SIZE 841 x 594 - A1	
DRAWING No :	901-(REEMA)-7551	REV.	

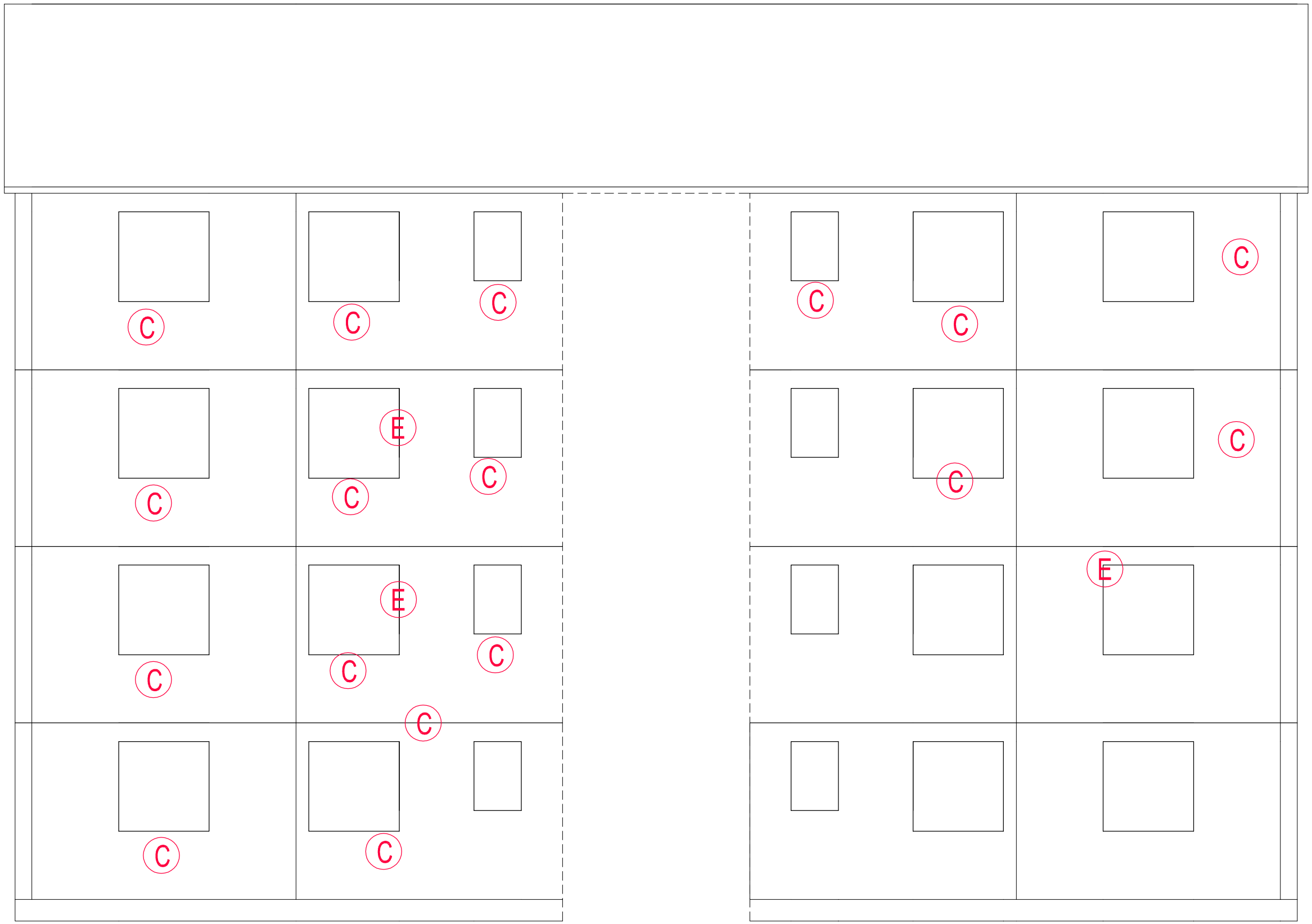

REAR ELEVATION
(SCALE 1:30)

10 30 50
20 40

Do not scale from this drawing.
All dimensions must be checked on site by the Contractor prior to the commencement of any fabrication or building works.
Where applicable, dimensions and details are to be read in conjunction with specialist consultants' drawings and/or other specifications; any disparity is to be brought to the attention of Michael Dyson Associates Limited prior to the commencement of any fabrication or building works.
©This drawing is the property and copyright of Michael Dyson Associates Limited; It shall not be copied to any other party without the express written consent of an authorised director of Michael Dyson Associates Limited.

NOTES

REV	DATE	AMENDMENTS	BY	APR'D

West House, Meltham Road, Honley,
Huddersfield HD9 6LB
t. 01484 666888 f. 01484 664186
w. www.mdyson.co.uk

CLIENT :

RPS PLANNING & DEVELOPMENT

PROJECT :

STRUCTURAL SURVEY FOR 4NR REEMA FLATS BLOCKS IN MILTON KEYNES

TITLE :

TYPICAL EXISTING REAR ELEVATION
RUTLAND HOUSE

DRAWN BY :	SM	APPROVED BY :	
DATE :	25/06/2013	DATE :	
SCALE :	1:30	ORIGINAL DRAWING SIZE 841 x 594 - A1	
DRAWING No :	902-(REEMA)-7551	REV.	

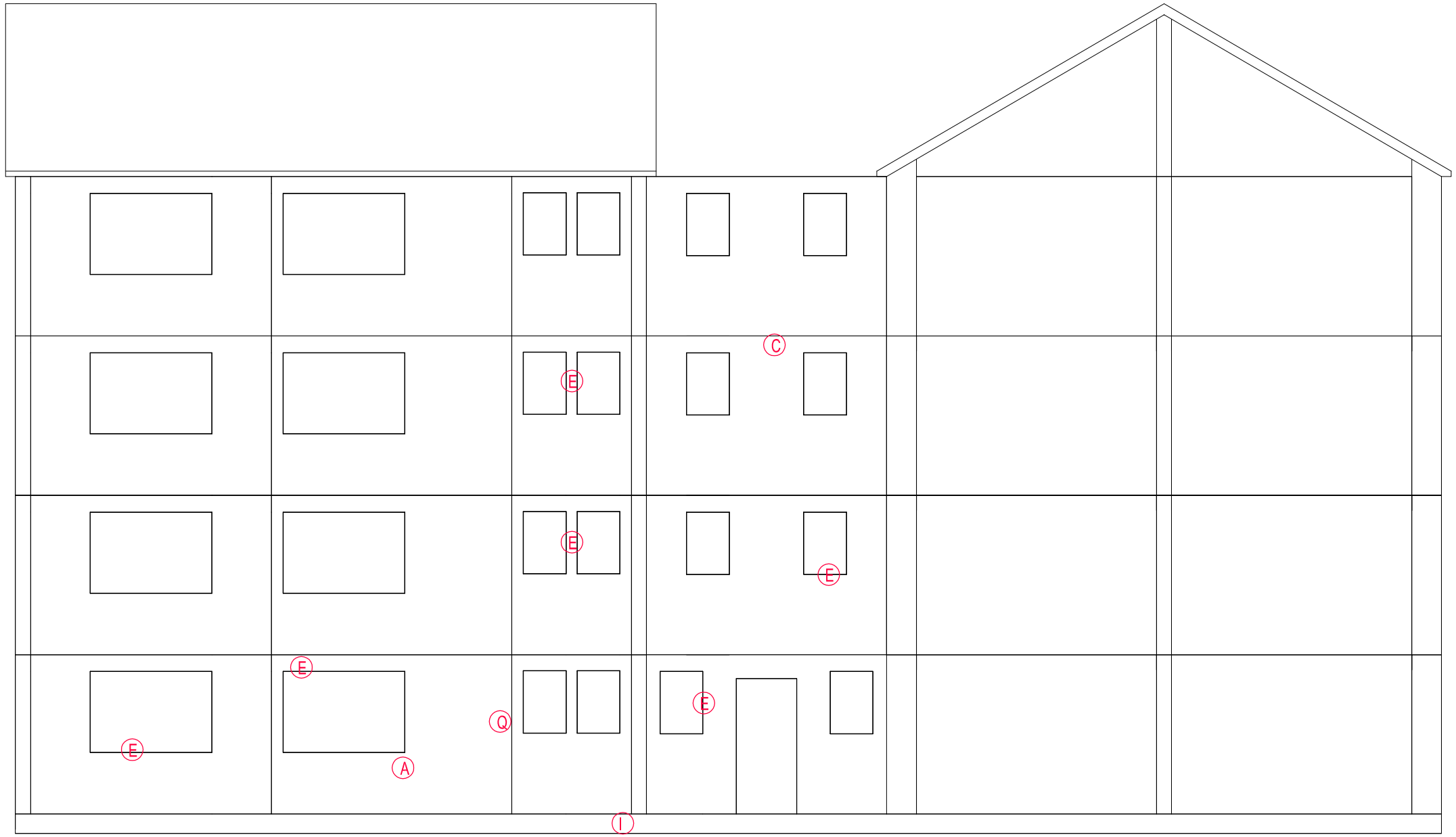

LH GABLE ELEVATION
(SCALE 1:40)

10 30 50
20 40

Do not scale from this drawing.
All dimensions must be checked on site by the Contractor prior to the commencement of any fabrication or building works.
Where applicable, dimensions and details are to be read in conjunction with specialist consultants' drawings and/or other specifications; any disparity is to be brought to the attention of Michael Dyson Associates Limited prior to the commencement of any fabrication or building works.
©This drawing is the property and copyright of Michael Dyson Associates Limited; It shall not be copied to any other party without the express written consent of an authorised director of Michael Dyson Associates Limited.

NOTES

REV	DATE	AMENDMENTS	BY	APR'D

West House, Meltham Road, Honley,
Huddersfield HD9 6LB
t. 01484 666888 f. 01484 664186
w. www.mdyson.co.uk

CLIENT :

RPS PLANNING & DEVELOPMENT

PROJECT :

STRUCTURAL SURVEY FOR 4NR REEMA FLATS BLOCKS IN MILTON KEYNES

TITLE :

TYPICAL EXISTING LH GABLE ELEVATION PEMBROKE HOUSE

DRAWN BY :	SM	APPROVED BY :	
DATE :	25/06/2013	DATE :	
SCALE :	1:40	ORIGINAL DRAWING SIZE 841 x 594 - A1	
DRAWING No :	903-(REEMA)-7551	REV.	

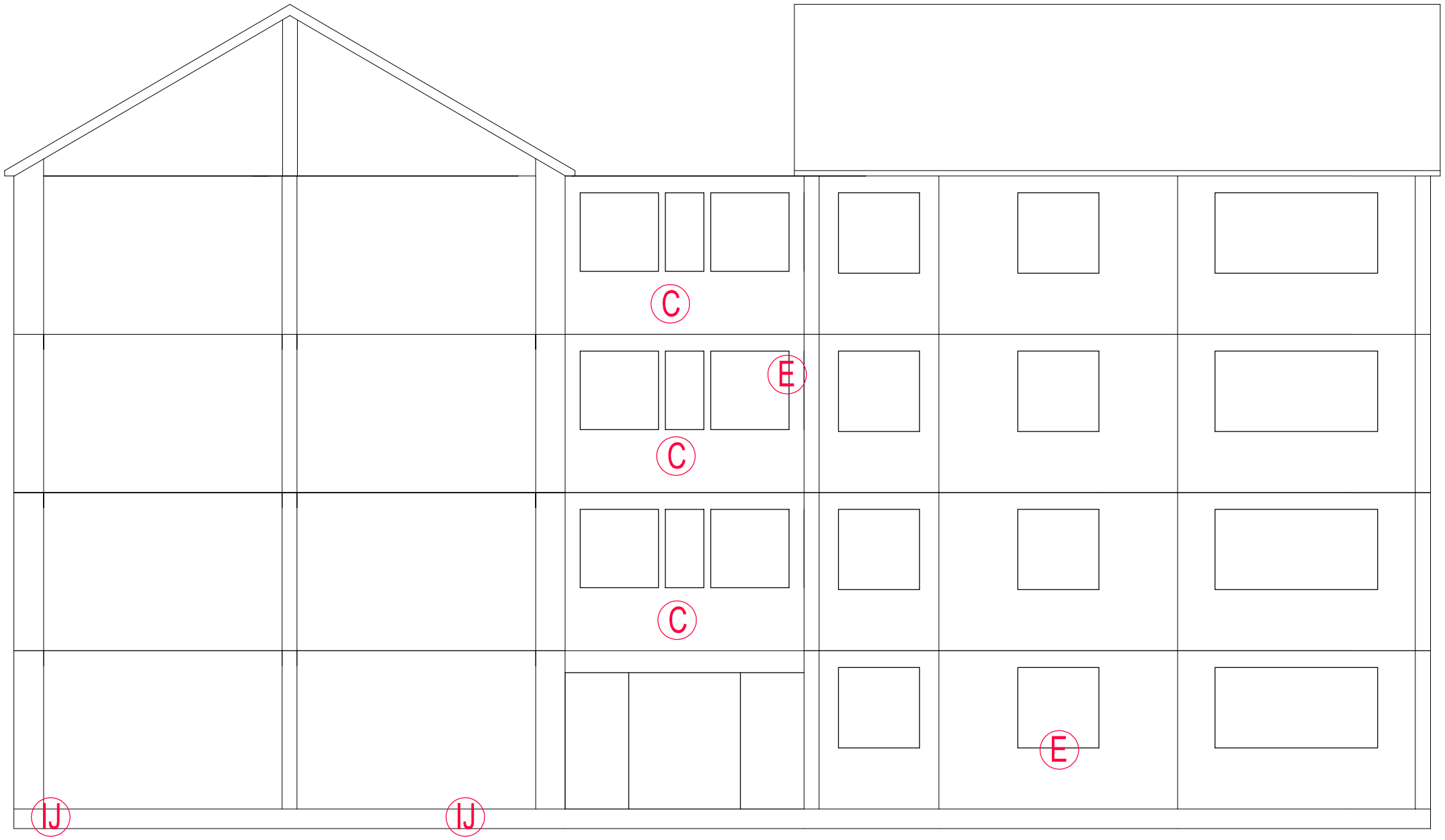

RH GABLE ELEVATION
(SCALE 1:40)

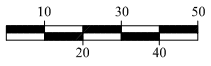

Do not scale from this drawing.
All dimensions must be checked on site by the Contractor prior to the commencement of any fabrication or building works.
Where applicable, dimensions and details are to be read in conjunction with specialist consultants' drawings and/or other specifications; any disparity is to be brought to the attention of Michael Dyson Associates Limited prior to the commencement of any fabrication or building works.
©This drawing is the property and copyright of Michael Dyson Associates Limited; It shall not be copied to any other party without the express written consent of an authorised director of Michael Dyson Associates Limited.

NOTES

REV	DATE	AMENDMENTS	BY	APR'D

West House, Meltham Road, Honley,
Huddersfield HD9 6LB
t. 01484 666888 f. 01484 664186
w. www.mdyson.co.uk

CLIENT :

RPS PLANNING & DEVELOPMENT

PROJECT :

STRUCTURAL SURVEY FOR 4NR REEMA FLATS BLOCKS IN MILTON KEYNES

TITLE :

TYPICAL EXISTING RH GABLE ELEVATION
PEMBROKE HOUSE

DRAWN BY :	SM	APPROVED BY :	
DATE :	25/06/2013	DATE :	
SCALE :	1:40	ORIGINAL DRAWING SIZE 841 x 594 - A1	
DRAWING No :	904-(REEMA)-7551	REV.	

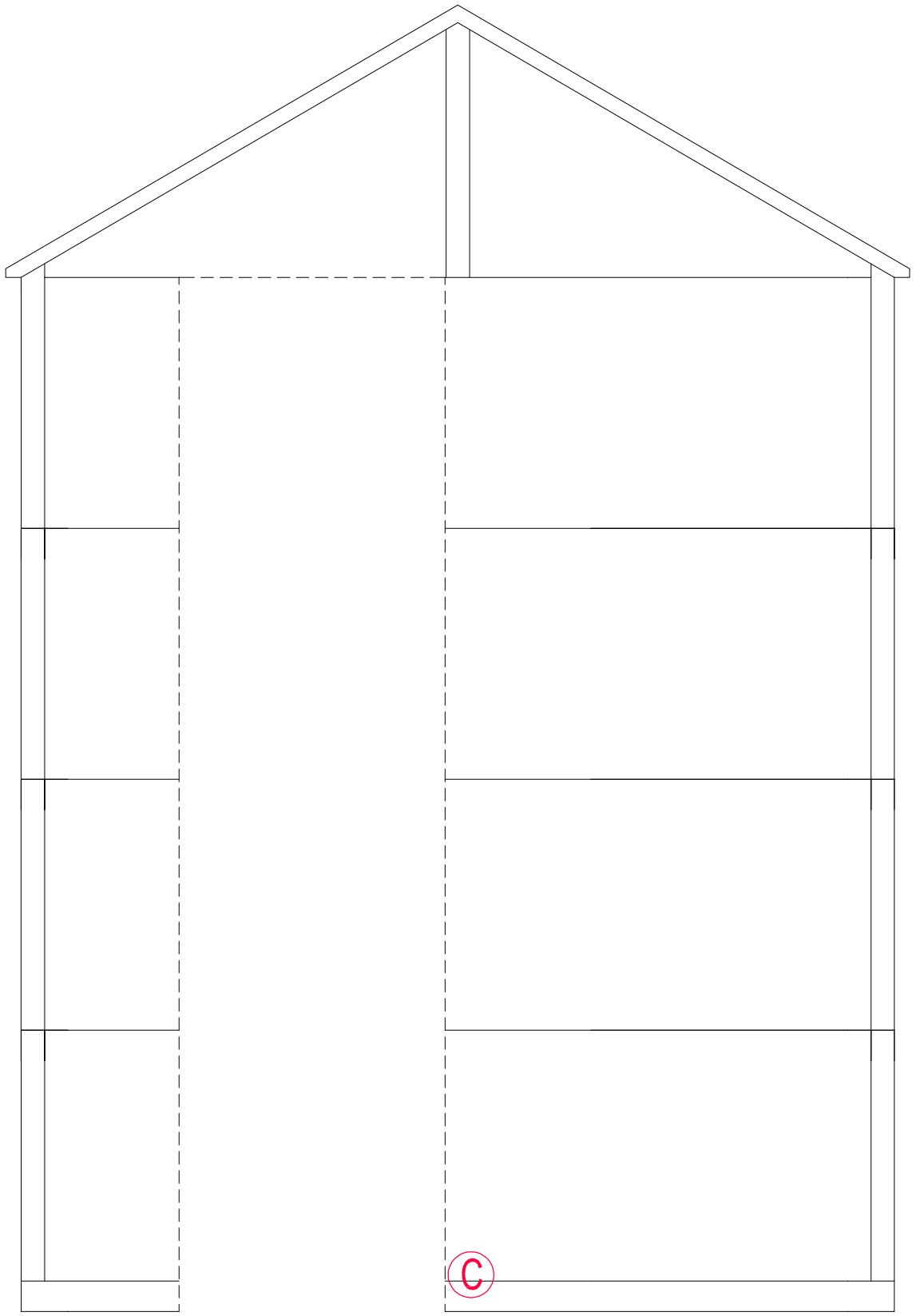

LINK GABLE ELEVATION
(SCALE 1:30)

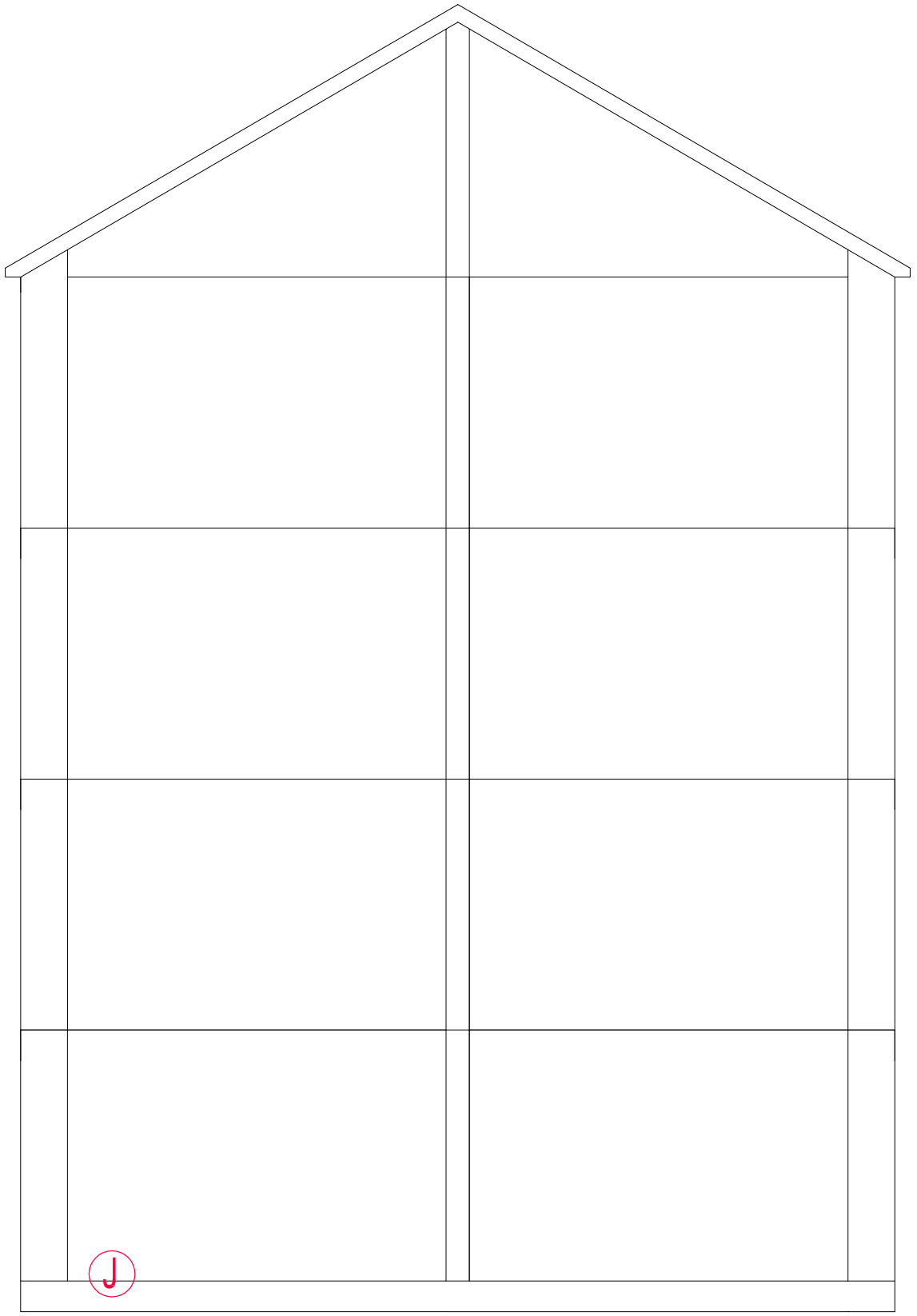

REAR LINK GABLE ELEVATION
(SCALE 1:30)

10 30 50
20 40

Do not scale from this drawing.
All dimensions must be checked on site by the Contractor prior to the commencement of any fabrication or building works.
Where applicable, dimensions and details are to be read in conjunction with specialist consultants' drawings and/or other specifications; any disparity is to be brought to the attention of Michael Dyson Associates Limited prior to the commencement of any fabrication or building works.
©This drawing is the property and copyright of Michael Dyson Associates Limited; It shall not be copied to any other party without the express written consent of an authorised director of Michael Dyson Associates Limited.

NOTES

REV	DATE	AMENDMENTS	BY	APR'D

West House, Meltham Road, Honley,
Huddersfield HD9 6LB
t. 01484 666888 f. 01484 664186
w. www.mdyson.co.uk

CLIENT :
RPS PLANNING & DEVELOPMENT

PROJECT :
STRUCTURAL SURVEY FOR 4NR REEMA FLATS BLOCKS IN MILTON KEYNES

TITLE :
TYPICAL EXISTING LINK GABLE ELEVATIONS PEMBROKE HOUSE

DRAWN BY :	SM	APPROVED BY :	
DATE :	25/06/2013	DATE :	
SCALE :	1:30	ORIGINAL DRAWING SIZE 841 x 594 - A1	
DRAWING No :	905-(REEMA)-7551	REV.	

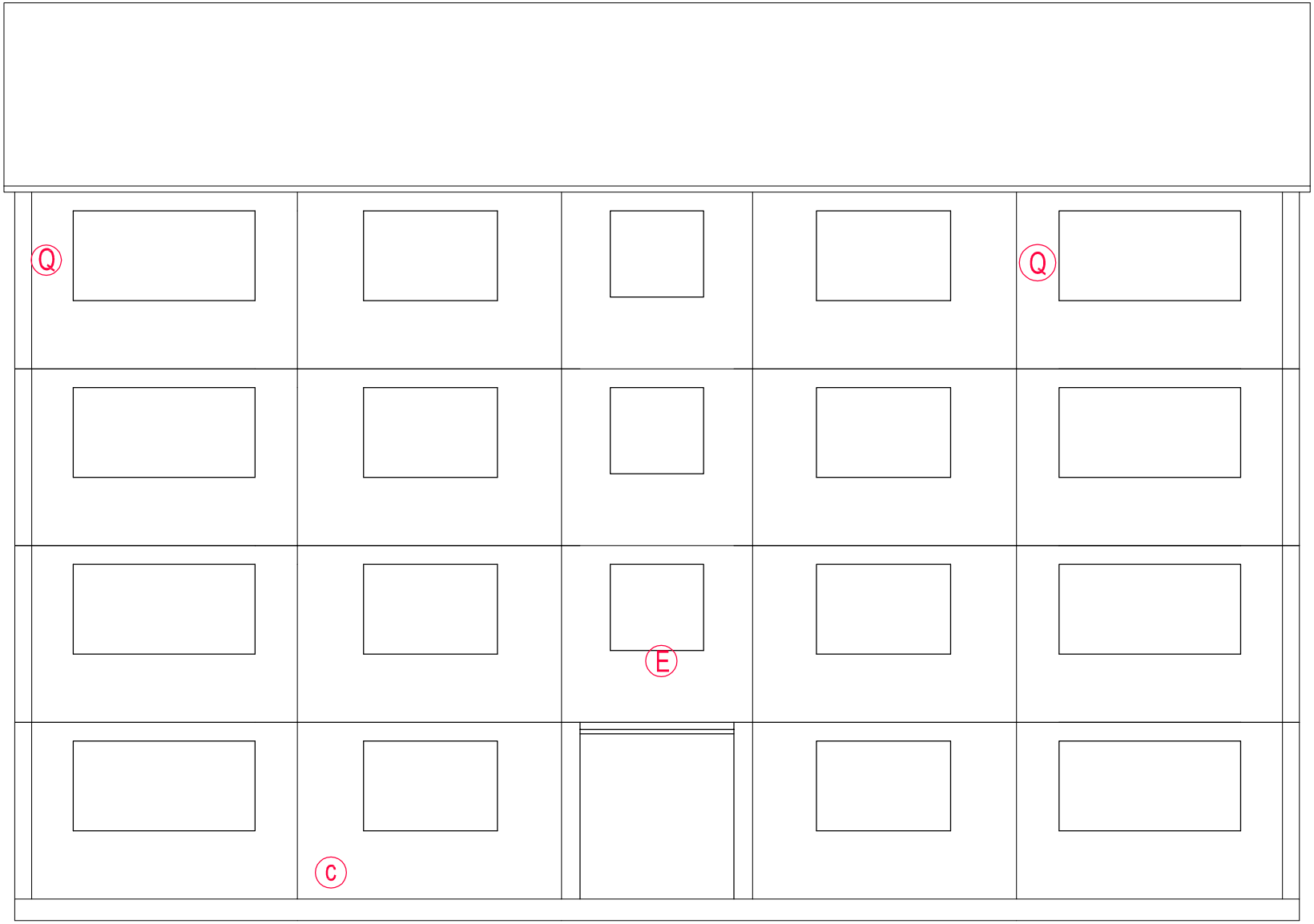

FRONT ELEVATION
(SCALE 1:30)

10 30 50
20 40

Do not scale from this drawing.
All dimensions must be checked on site by the Contractor prior to the commencement of any fabrication or building works.
Where applicable, dimensions and details are to be read in conjunction with specialist consultants' drawings and/or other specifications; any disparity is to be brought to the attention of Michael Dyson Associates Limited prior to the commencement of any fabrication or building works.
©This drawing is the property and copyright of Michael Dyson Associates Limited; It shall not be copied to any other party without the express written consent of an authorised director of Michael Dyson Associates Limited.

NOTES

REV	DATE	AMENDMENTS	BY	APRD

West House, Meltham Road, Honley,
Huddersfield HD9 6LB
t. 01484 666888 f. 01484 664186
w. www.mdyson.co.uk

CLIENT :
RPS PLANNING & DEVELOPMENT

PROJECT :
STRUCTURAL SURVEY FOR 4NR REEMA FLATS BLOCKS IN MILTON KEYNES

TITLE :
TYPICAL EXISTING FRONT ELEVATION NORFOLK HOUSE

DRAWN BY :	SM	APPROVED BY :	
DATE :	25/06/2013	DATE :	
SCALE :	1:30	ORIGINAL DRAWING SIZE 841 x 594 - A1	
DRAWING No :	301-(REEMA)-7551	REV.	

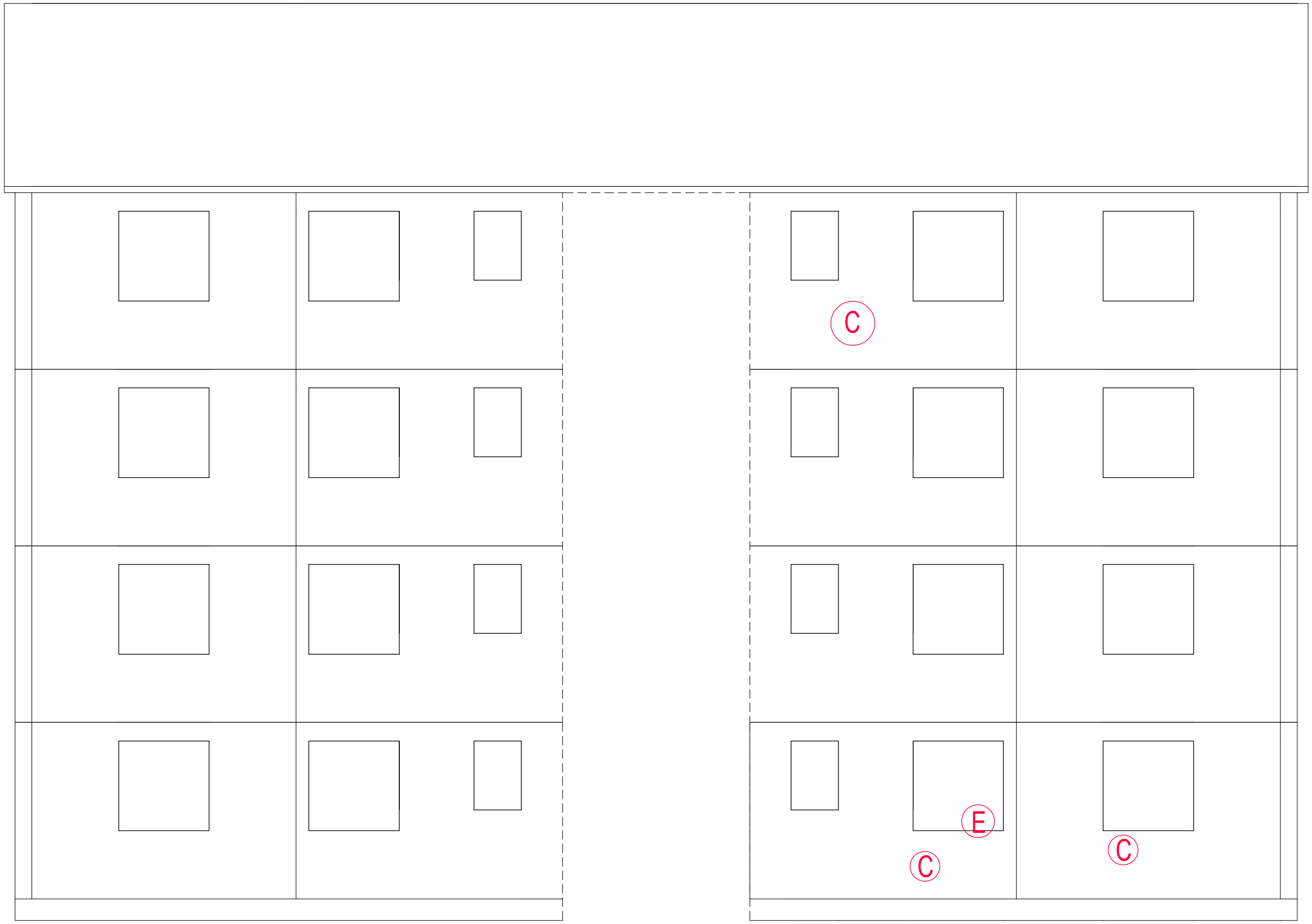

REAR ELEVATION
(SCALE 1:30)

10 30 50
20 40

Do not scale from this drawing.
All dimensions must be checked on site by the Contractor prior to the commencement of any fabrication or building works.
Where applicable, dimensions and details are to be read in conjunction with specialist consultants' drawings and/or other specifications; any disparity is to be brought to the attention of Michael Dyson Associates Limited prior to the commencement of any fabrication or building works.
©This drawing is the property and copyright of Michael Dyson Associates Limited; It shall not be copied to any other party without the express written consent of an authorised director of Michael Dyson Associates Limited.

NOTES

REV	DATE	AMENDMENTS	BY	APR'D

West House, Meltham Road, Honley,
Huddersfield HD9 6LB
t. 01484 666888 f. 01484 664186
w. www.mdyson.co.uk

CLIENT :

RPS PLANNING & DEVELOPMENT

PROJECT :

STRUCTURAL SURVEY FOR 4NR REEMA FLATS BLOCKS IN MILTON KEYNES

TITLE :

TYPICAL EXISTING REAR ELEVATION
RUTLAND HOUSE

DRAWN BY :	SM	APPROVED BY :	
DATE :	25/06/2013	DATE :	
SCALE :	1:30	ORIGINAL DRAWING SIZE 841 x 594 - A1	
DRAWING No :	302-(REEMA)-7551	REV.	

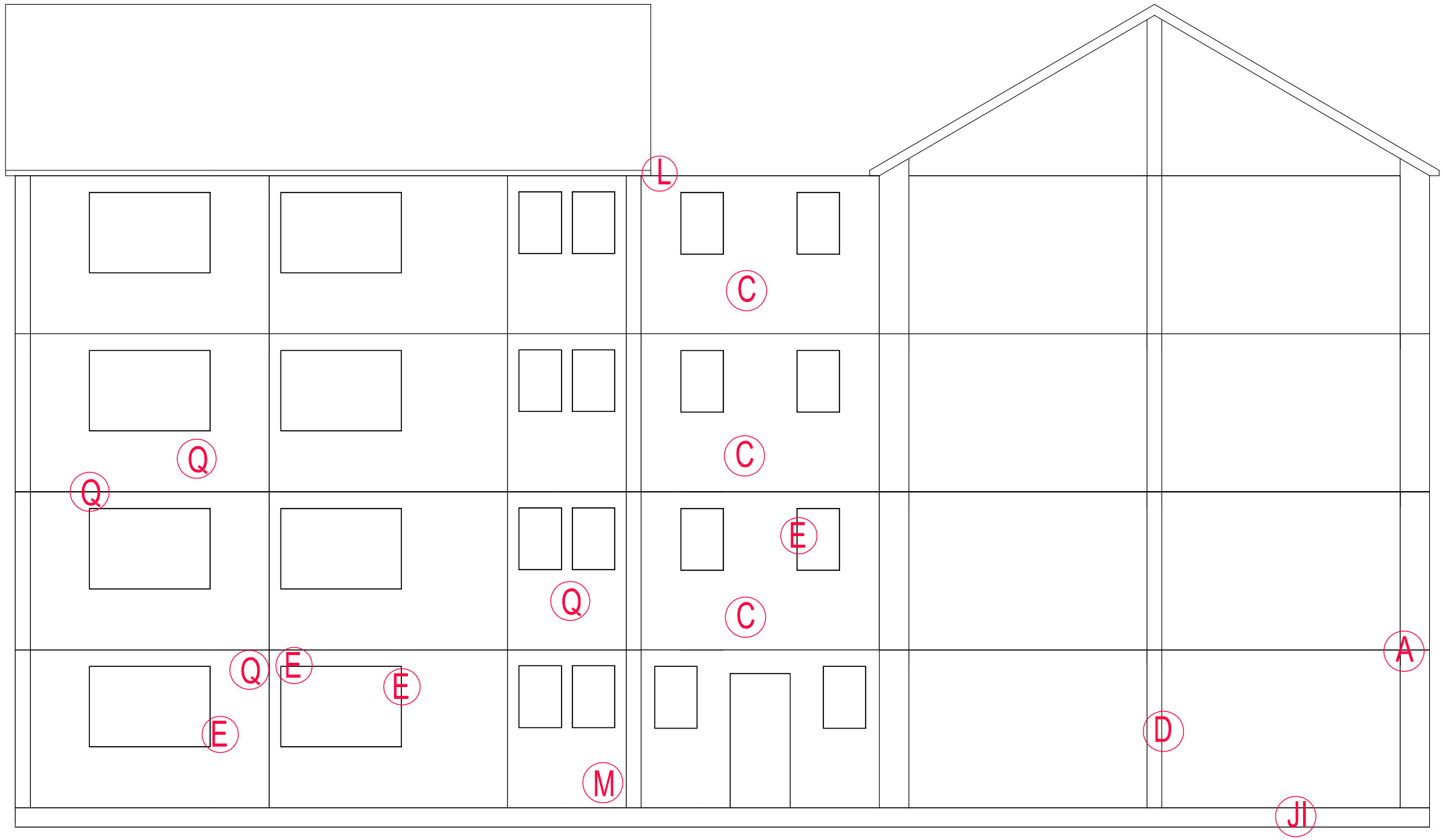

LH GABLE ELEVATION
(SCALE 1:40)

10 30 50
20 40

Do not scale from this drawing.
All dimensions must be checked on site by the Contractor prior to the commencement of any fabrication or building works.
Where applicable, dimensions and details are to be read in conjunction with specialist consultants' drawings and/or other specifications; any disparity is to be brought to the attention of Michael Dyson Associates Limited prior to the commencement of any fabrication or building works.
©This drawing is the property and copyright of Michael Dyson Associates Limited; It shall not be copied to any other party without the express written consent of an authorised director of Michael Dyson Associates Limited.

NOTES

REV	DATE	AMENDMENTS	BY	APR'D

West House, Meltham Road, Honley,
Huddersfield HD9 6LB
t. 01484 666888 f. 01484 664186
w. www.mdyson.co.uk

CLIENT :

RPS PLANNING & DEVELOPMENT

PROJECT :

STRUCTURAL SURVEY FOR 4NR REEMA FLATS BLOCKS IN MILTON KEYNES

TITLE :

TYPICAL EXISTING LH GABLE ELEVATION
RUTLAND HOUSE

DRAWN BY :	SM	APPROVED BY :	
DATE :	25/06/2013	DATE :	
SCALE :	1:40	ORIGINAL DRAWING SIZE 841 x 594 - A1	
DRAWING No :	803-(REEMA)-7551	REV.	

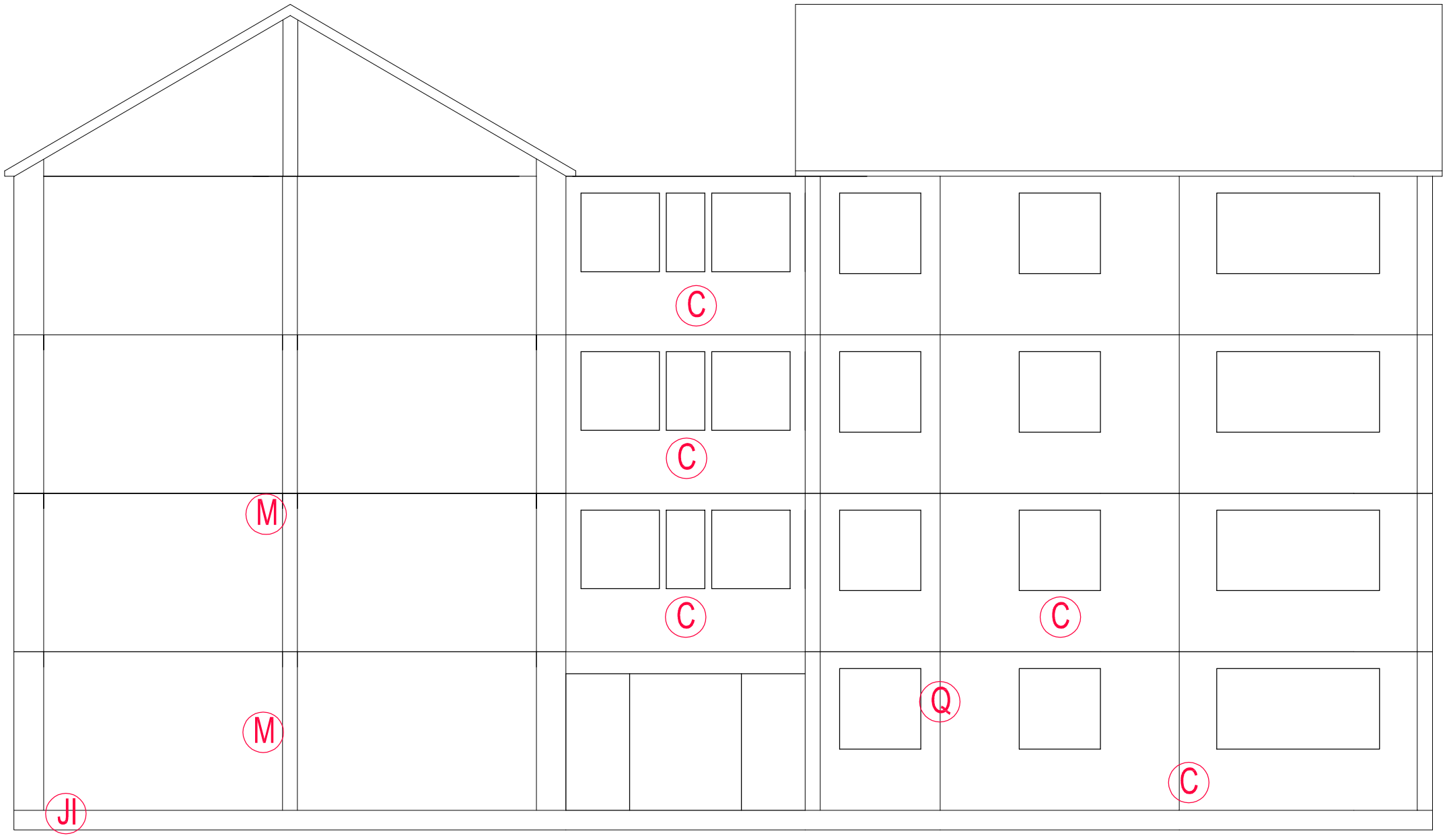

RH GABLE ELEVATION
(SCALE 1:40)

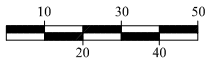

Do not scale from this drawing.
All dimensions must be checked on site by the Contractor prior to the commencement of any fabrication or building works.
Where applicable, dimensions and details are to be read in conjunction with specialist consultants' drawings and/or other specifications; any disparity is to be brought to the attention of Michael Dyson Associates Limited prior to the commencement of any fabrication or building works.
©This drawing is the property and copyright of Michael Dyson Associates Limited; It shall not be copied to any other party without the express written consent of an authorised director of Michael Dyson Associates Limited.

NOTES

REV	DATE	AMENDMENTS	BY	APR'D

West House, Meltham Road, Honley,
Huddersfield HD9 6LB
t. 01484 666888 f. 01484 664186
w. www.mdyson.co.uk

CLIENT :

RPS PLANNING & DEVELOPMENT

PROJECT :

STRUCTURAL SURVEY FOR 4NR REEMA FLATS BLOCKS IN MILTON KEYNES

TITLE :

TYPICAL EXISTING RH GABLE ELEVATION
RUTLAND HOUSE

DRAWN BY :	SM	APPROVED BY :	
DATE :	25/06/2013	DATE :	
SCALE :	1:40	ORIGINAL DRAWING SIZE 841 x 594 - A1	
DRAWING No :	804-(REEMA)-7551	REV.	

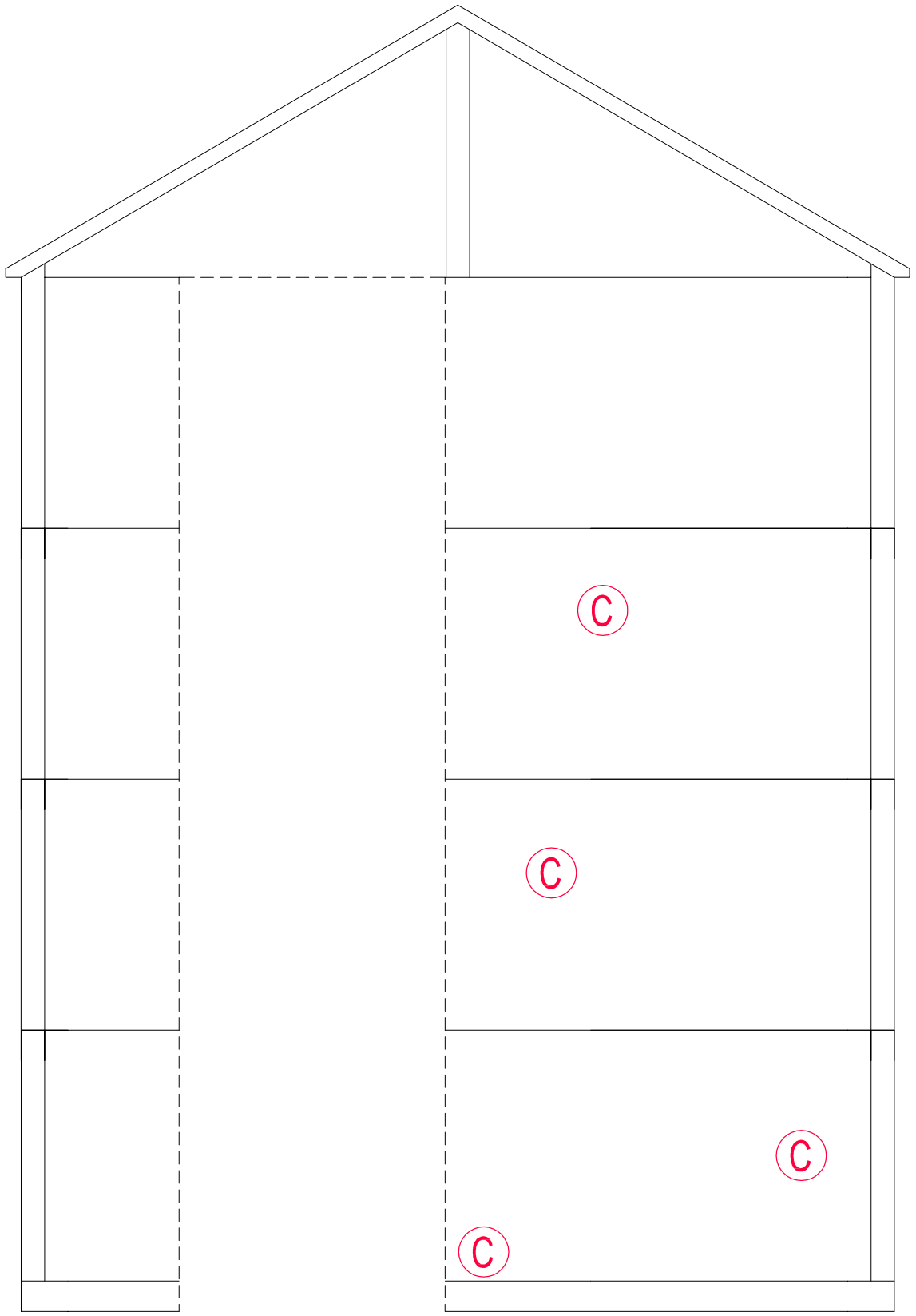

LINK GABLE ELEVATION
(SCALE 1:30)

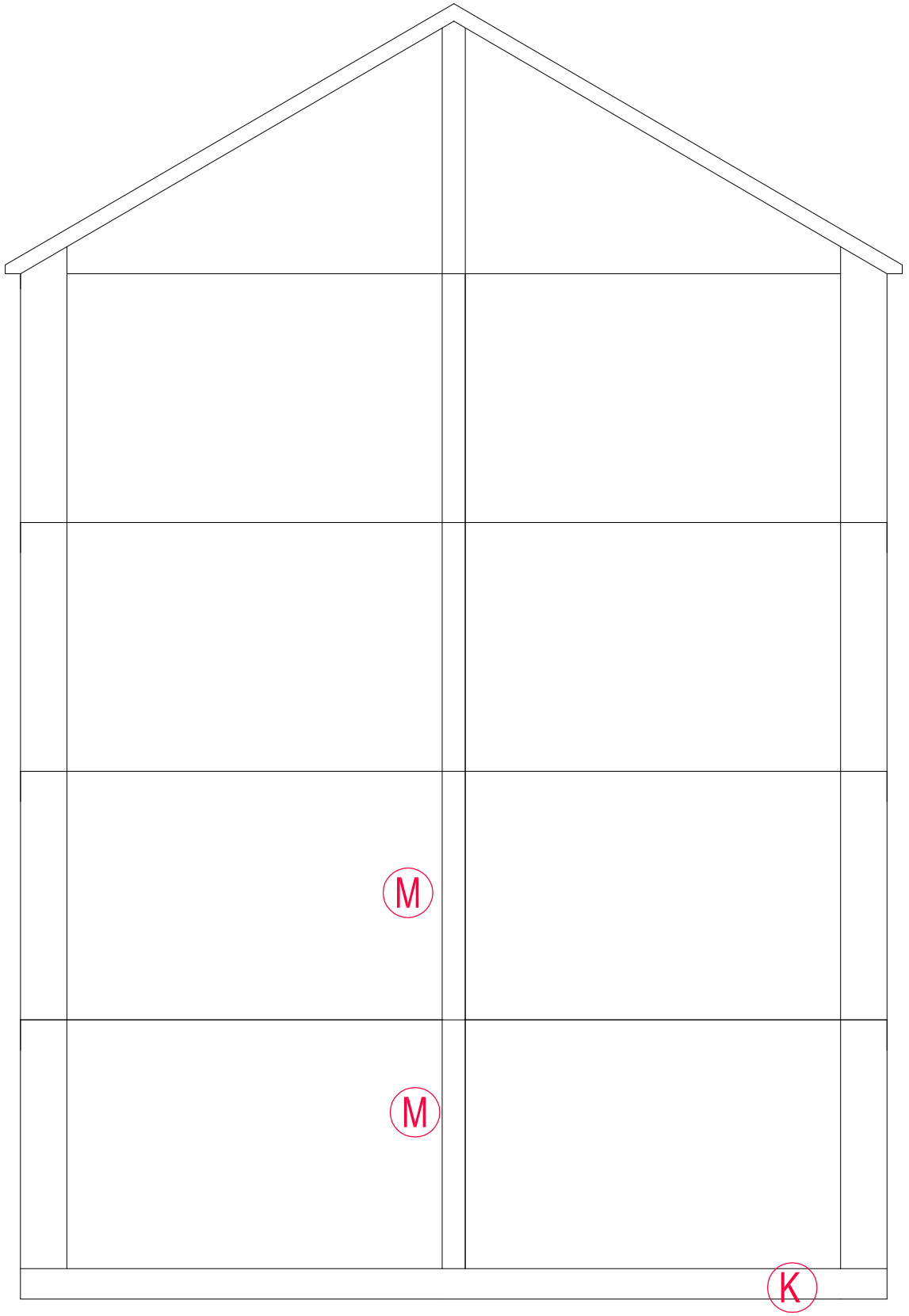

REAR LINK GABLE ELEVATION
(SCALE 1:30)

10 30 50
20 40

Do not scale from this drawing.
All dimensions must be checked on site by the Contractor prior to the commencement of any fabrication or building works.
Where applicable, dimensions and details are to be read in conjunction with specialist consultants' drawings and/or other specifications; any disparity is to be brought to the attention of Michael Dyson Associates Limited prior to the commencement of any fabrication or building works.
©This drawing is the property and copyright of Michael Dyson Associates Limited; It shall not be copied to any other party without the express written consent of an authorised director of Michael Dyson Associates Limited.

NOTES

REV	DATE	AMENDMENTS	BY	APR'D

West House, Meltham Road, Honley,
Huddersfield HD9 6LB
t. 01484 666888 f. 01484 664186
w. www.mdyson.co.uk

CLIENT :
RPS PLANNING & DEVELOPMENT

PROJECT :
STRUCTURAL SURVEY FOR 4NR REEMA FLATS BLOCKS IN MILTON KEYNES

TITLE :
TYPICAL EXISTING LINK GABLE ELEVATIONS NORFOLK HOUSE

DRAWN BY :	SM	APPROVED BY :	
DATE :	25/06/2013	DATE :	
SCALE :	1:30	ORIGINAL DRAWING SIZE 841 x 594 - A1	
DRAWING No :	305-(REEMA)-7551	REV.	

RPS PLANNING & DEVELOPMENT			
Elevation & Plan Drawings			
Internal Communal Area Defects Log			
House Type	4 Storey Reema Flats Blocks	**Site**	Bletchley
Defect	**Description of Defect**		
1	Cracking to Panel Joint		
2	Cracking to Panel		
3	Cracking to Window Surround		
4	Damaged Panel		
5	Cracking to Ceiling		
6	Missing Mortar From Panel Joint		
7	Cracking to Lintel Above Door		
8	Rust Spotting to Panel		
9	Cracking to Door Surround		
10	Cracking to Floor Slab		

Table G.13

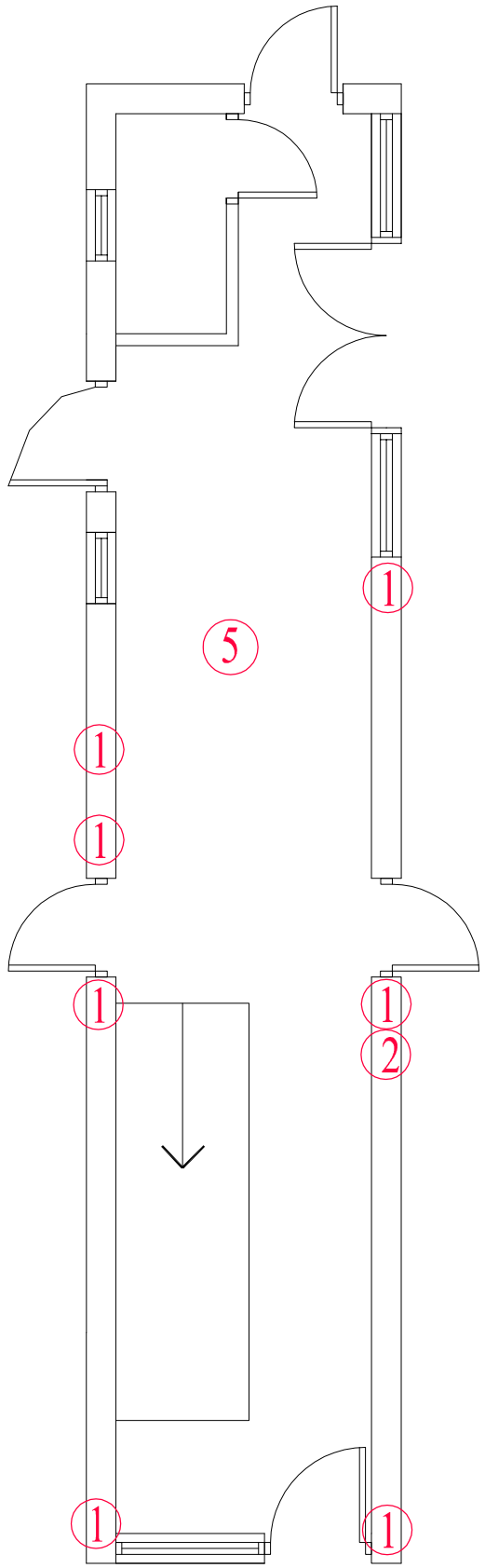

COMMUNAL STAIRCASE GROUND FLOOR PLAN
(Scale 1:30)

10 30 50
20 40

Do not scale from this drawing.
All dimensions must be checked on site by the Contractor prior to the commencement of any fabrication or building works.
Where applicable, dimensions and details are to be read in conjunction with specialist consultants' drawings and/or other specifications; any disparity is to be brought to the attention of Michael Dyson Associates Limited prior to the commencement of any fabrication or building works.
©This drawing is the property and copyright of Michael Dyson Associates Limited; It shall not be copied to any other party without the express written consent of an authorised director of Michael Dyson Associates Limited.

NOTES

REV	DATE	AMENDMENTS	BY	APR'D

West House, Meltham Road, Honley,
Huddersfield HD9 6LB
t. 01484 666888 f. 01484 664186
w. www.mdyson.co.uk

CLIENT :
RPS PLANNING AND DEVELOPMENT

PROJECT :
STRUCTURAL SURVEYS TO 4NR FLATS BLOCKS IN MILTON KEYNES

TITLE :
COMMUNAL STAIRS GROUND FLOOR PLANS, ARGYLL HOUSE

DRAWN BY :	NG	APPROVED BY :	
DATE :	28-08-2013	DATE :	
SCALE :	1:30	ORIGINAL DRAWING SIZE 841 x 594 - A1	
DRAWING No :	1110-(REEMA)-7551	REV.	

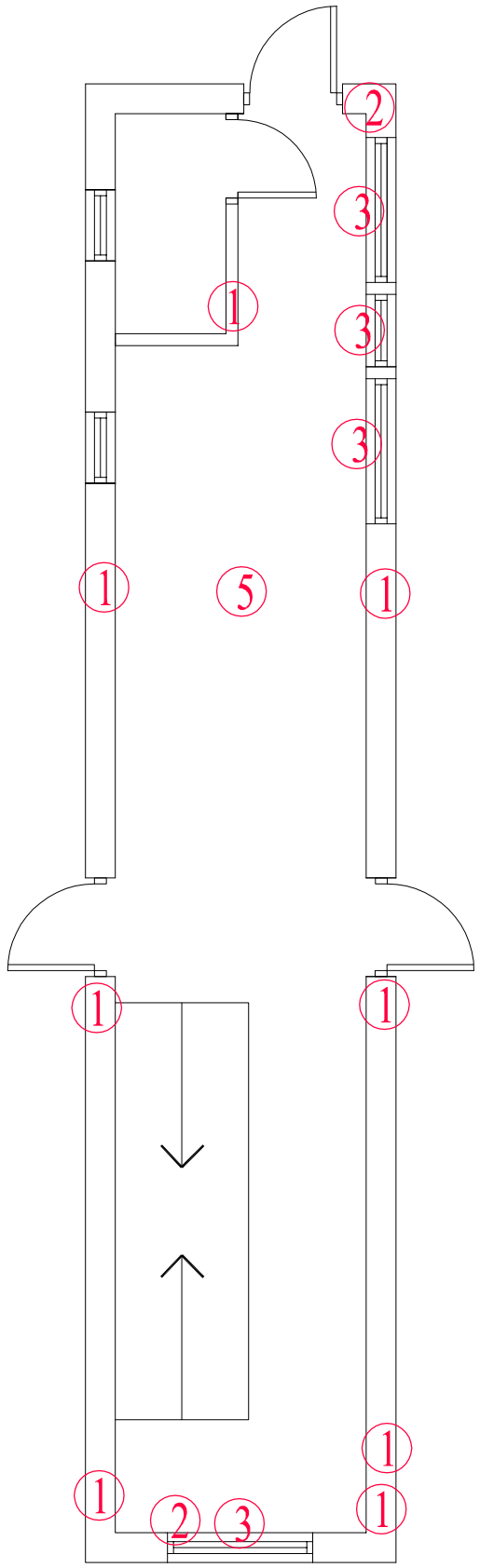

COMMUNAL STAIRCASE FIRST FLOOR PLANS
(Scale 1:30)

10 30 50
20 40

Do not scale from this drawing.
All dimensions must be checked on site by the Contractor prior to the commencement of any fabrication or building works.
Where applicable, dimensions and details are to be read in conjunction with specialist consultants' drawings and/or other specifications; any disparity is to be brought to the attention of Michael Dyson Associates Limited prior to the commencement of any fabrication or building works.
©This drawing is the property and copyright of Michael Dyson Associates Limited; It shall not be copied to any other party without the express written consent of an authorised director of Michael Dyson Associates Limited.

NOTES

REV	DATE	AMENDMENTS	BY	APR'D

West House, Meltham Road, Honley,
Huddersfield HD9 6LB
t. 01484 666888 f. 01484 664186
w. www.mdyson.co.uk

CLIENT :
RPS PLANNING & DEVELOPMENT

PROJECT :
STRUCTURAL SURVEYS TO 4NR REEMA FLATS BLOCKS IN MILTON KEYNES

TITLE :
COMMUNAL STAIRCASE FIRST FLOOR PLAN
ARGYLL HOUSE

DRAWN BY :	NG	APPROVED BY :	
DATE :	28-08-2013	DATE :	
SCALE :	1:30	ORIGINAL DRAWING SIZE 841 x 594 - A1	
DRAWING No :	1111-(REEMA)-7551	REV.	

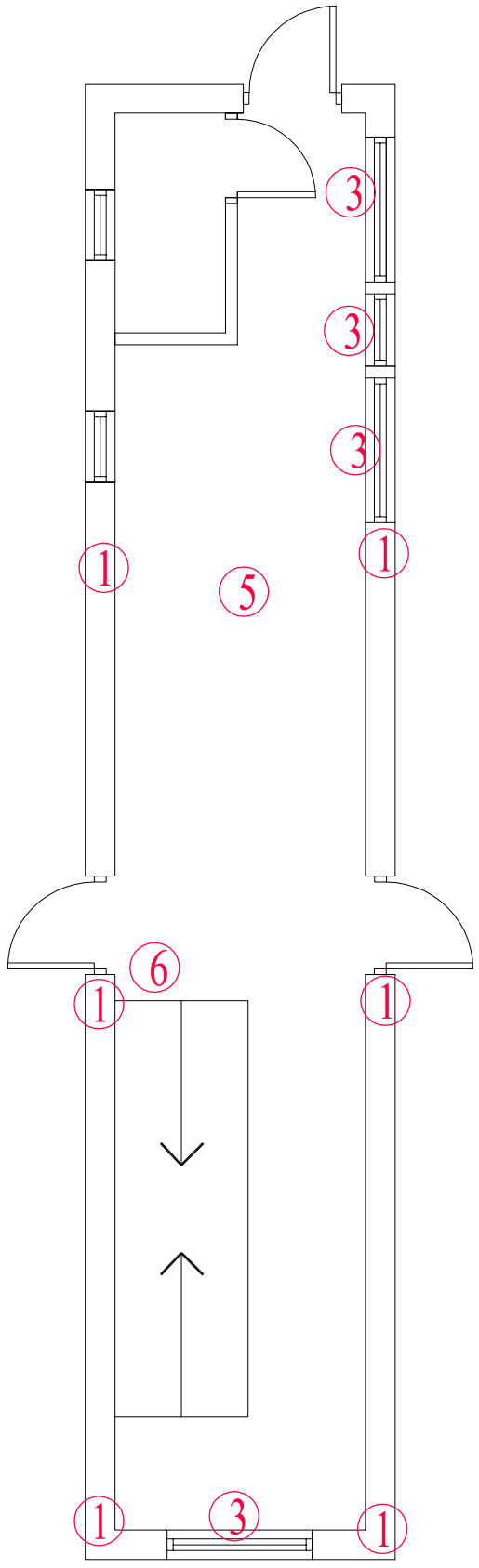

COMMUNAL STAIRCASE SECOND FLOOR PLANS
(Scale 1:30)

10 30 50
20 40

Do not scale from this drawing.
All dimensions must be checked on site by the Contractor prior to the commencement of any fabrication or building works.
Where applicable, dimensions and details are to be read in conjunction with specialist consultants' drawings and/or other specifications; any disparity is to be brought to the attention of Michael Dyson Associates Limited prior to the commencement of any fabrication or building works.
©This drawing is the property and copyright of Michael Dyson Associates Limited; It shall not be copied to any other party without the express written consent of an authorised director of Michael Dyson Associates Limited.

NOTES

REV	DATE	AMENDMENTS	BY	APR'D

West House, Meltham Road, Honley,
Huddersfield HD9 6LB
t. 01484 666888 f. 01484 664186
w. www.mdyson.co.uk

CLIENT :
R5PS PLANNING & DEVELOPMENT

PROJECT :
STRUCTURAL SURVEY OF 4NR REEMA FLATS BLOCKS IN MILTON KEYNES

TITLE :
COMMUNAL STAIRCASE SECOND FLOOR PLAN ARGYLL HOUSE

DRAWN BY :	NG	APPROVED BY :	
DATE :	28-08-2013	DATE :	
SCALE :	1:30	ORIGINAL DRAWING SIZE 841 x 594 - A1	
DRAWING No :	1112-(REEMA)-7551	REV.	

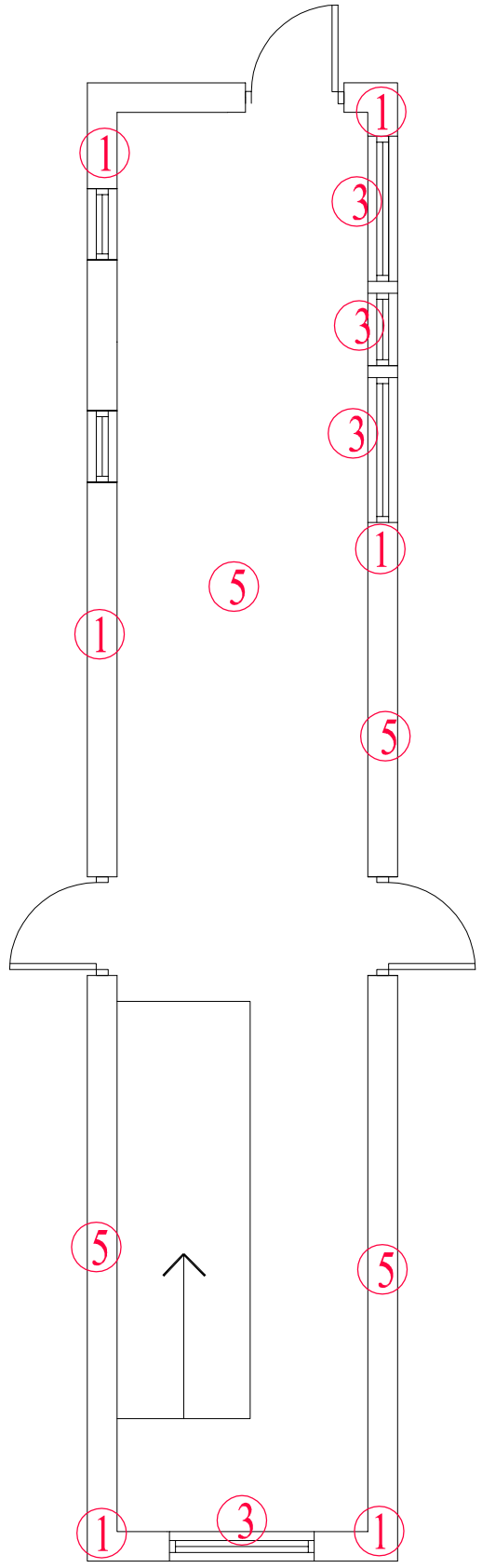

COMMUNAL STAIRCASE THIRD FLOOR PLAN
(Scale 1:30)

10 30 50
20 40

Do not scale from this drawing.
All dimensions must be checked on site by the Contractor prior to the commencement of any fabrication or building works.
Where applicable, dimensions and details are to be read in conjunction with specialist consultants' drawings and/or other specifications; any disparity is to be brought to the attention of Michael Dyson Associates Limited prior to the commencement of any fabrication or building works.
©This drawing is the property and copyright of Michael Dyson Associates Limited; It shall not be copied to any other party without the express written consent of an authorised director of Michael Dyson Associates Limited.

NOTES

REV	DATE	AMENDMENTS	BY	APR'D

West House, Meltham Road, Honley,
Huddersfield HD9 6LB
t. 01484 666888 f. 01484 664186
w. www.mdyson.co.uk

CLIENT :
RPS PLANNING & DEVELOPMENT

PROJECT :
STRUCTURAL SURVEY TO 4NR REEMA FLATS BLOCKS IN MILTON KEYNES

TITLE :
COMMUNAL STAIRCASE THIRD FLOOR PLAN
ARGYLL HOUSE

DRAWN BY :	NG	APPROVED BY :	
DATE :	29-08-2013	DATE :	
SCALE :	1:30	ORIGINAL DRAWING SIZE 841 x 594 - A1	
DRAWING No :	1113-(Reema)-7551	REV.	

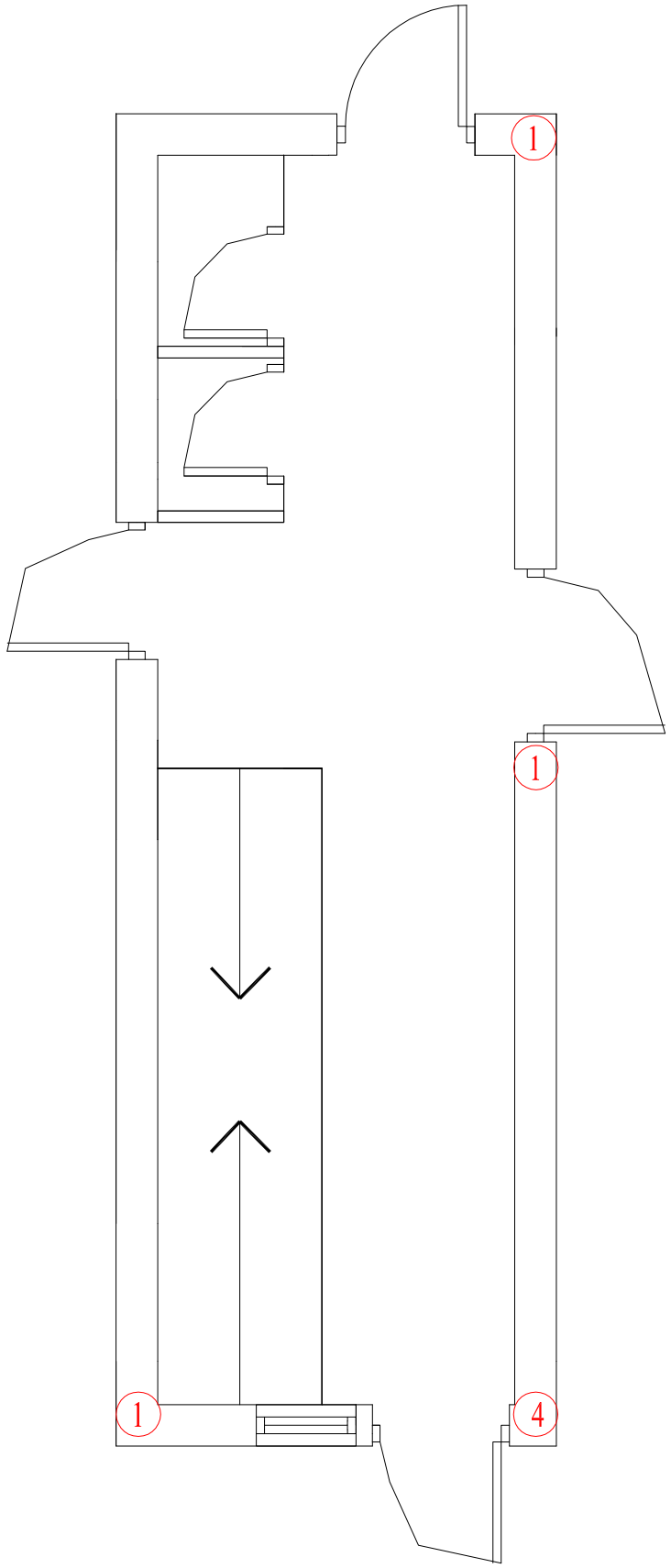

COMMUNAL STAIRCASE GROUND FLOOR PLAN
ENTRANCE ONE
(Scale 1:30)

10 30 50
20 40

Do not scale from this drawing.
All dimensions must be checked on site by the Contractor prior to the commencement of any fabrication or building works.
Where applicable, dimensions and details are to be read in conjunction with specialist consultants' drawings and/or other specifications; any disparity is to be brought to the attention of Michael Dyson Associates Limited prior to the commencement of any fabrication or building works.
©This drawing is the property and copyright of Michael Dyson Associates Limited; It shall not be copied to any other party without the express written consent of an authorised director of Michael Dyson Associates Limited.

NOTES

REV	DATE	AMENDMENTS	BY	APR'D

West House, Meltham Road, Honley,
Huddersfield HD9 6LB
t. 01484 666888 f. 01484 664186
w. www.mdyson.co.uk

CLIENT :
RPS PLANNING AND DEVELOPMENT

PROJECT :
STRUCTURAL SURVEYS TO 4NR FLATS BLOCKS IN MILTON KEYNES

TITLE :
COMMUNAL STAIRS GROUND FLOOR PLANS, AVON HOUSE 66-77

DRAWN BY :	NG	APPROVED BY :	
DATE :	09-09-2013	DATE :	
SCALE :	1:30	ORIGINAL DRAWING SIZE 841 x 594 - A1	
DRAWING No :	710-(REEMA)-7551	REV.	

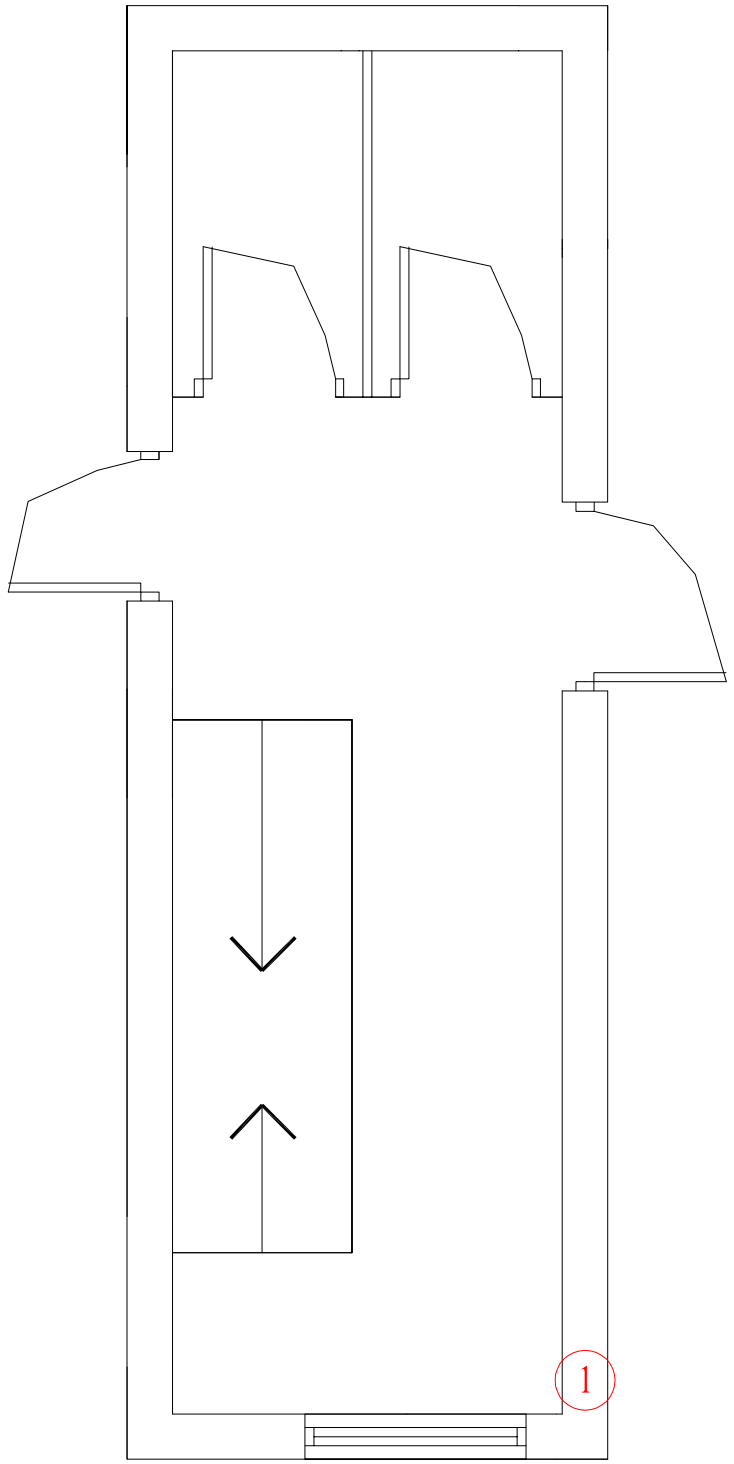

COMMUNAL STAIRCASE FIRST FLOOR PLANS
ENTRANCE ONE
(Scale 1:30)

10 30 50
20 40

Do not scale from this drawing.
All dimensions must be checked on site by the Contractor prior to the commencement of any fabrication or building works.
Where applicable, dimensions and details are to be read in conjunction with specialist consultants' drawings and/or other specifications; any disparity is to be brought to the attention of Michael Dyson Associates Limited prior to the commencement of any fabrication or building works.
©This drawing is the property and copyright of Michael Dyson Associates Limited; It shall not be copied to any other party without the express written consent of an authorised director of Michael Dyson Associates Limited.

NOTES

REV	DATE	AMENDMENTS	BY	APR'D

West House, Meltham Road, Honley,
Huddersfield HD9 6LB
t. 01484 666888 f. 01484 664186
w. www.mdyson.co.uk

CLIENT :
RPS PLANNING & DEVELOPMENT

PROJECT :
STRUCTURAL SURVEYS TO 4NR REEMA FLATS BLOCKS IN MILTON KEYNES

TITLE :
COMMUNAL STAIRCASE FIRST FLOOR PLAN
AVON HOUSE 66-77

DRAWN BY :	NG	APPROVED BY :	
DATE :	09-09-2013	DATE :	
SCALE :	1:30	ORIGINAL DRAWING SIZE 841 x 594 - A1	
DRAWING No :	711-(REEMA)-7551	REV.	

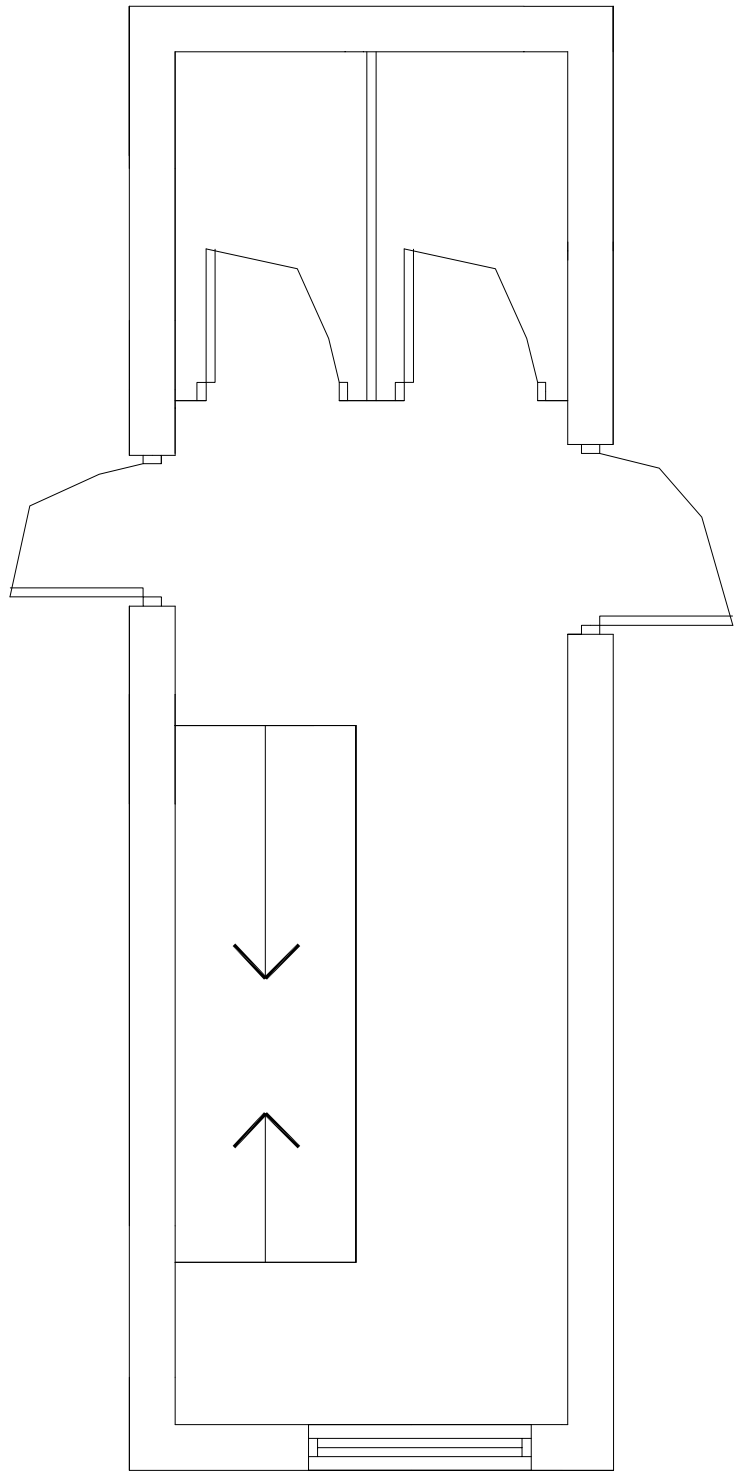

COMMUNAL STAIRCASE SECOND FLOOR PLANS
ENTRANCE ONE
(Scale 1:30)

NO DEFECTS

10 30 50
20 40

Do not scale from this drawing.
All dimensions must be checked on site by the Contractor prior to the commencement of any fabrication or building works.
Where applicable, dimensions and details are to be read in conjunction with specialist consultants' drawings and/or other specifications; any disparity is to be brought to the attention of Michael Dyson Associates Limited prior to the commencement of any fabrication or building works.
©This drawing is the property and copyright of Michael Dyson Associates Limited; It shall not be copied to any other party without the express written consent of an authorised director of Michael Dyson Associates Limited.

NOTES

REV	DATE	AMENDMENTS	BY	APR'D

West House, Meltham Road, Honley,
Huddersfield HD9 6LB
t. 01484 666888 f. 01484 664186
w. www.mdyson.co.uk

CLIENT :
R5PS PLANNING & DEVELOPMENT

PROJECT :
STRUCTURAL SURVEY OF 4NR REEMA FLATS BLOCKS IN MILTON KEYNES

TITLE :
COMMUNAL STAIRCASE SECOND FLOOR PLAN AVON HOUSE 66-77

DRAWN BY :	NG	APPROVED BY :	
DATE :	09-09-2013	DATE :	
SCALE :	1:30	ORIGINAL DRAWING SIZE 841 x 594 - A1	
DRAWING No :	712-(REEMA)-7551	REV.	

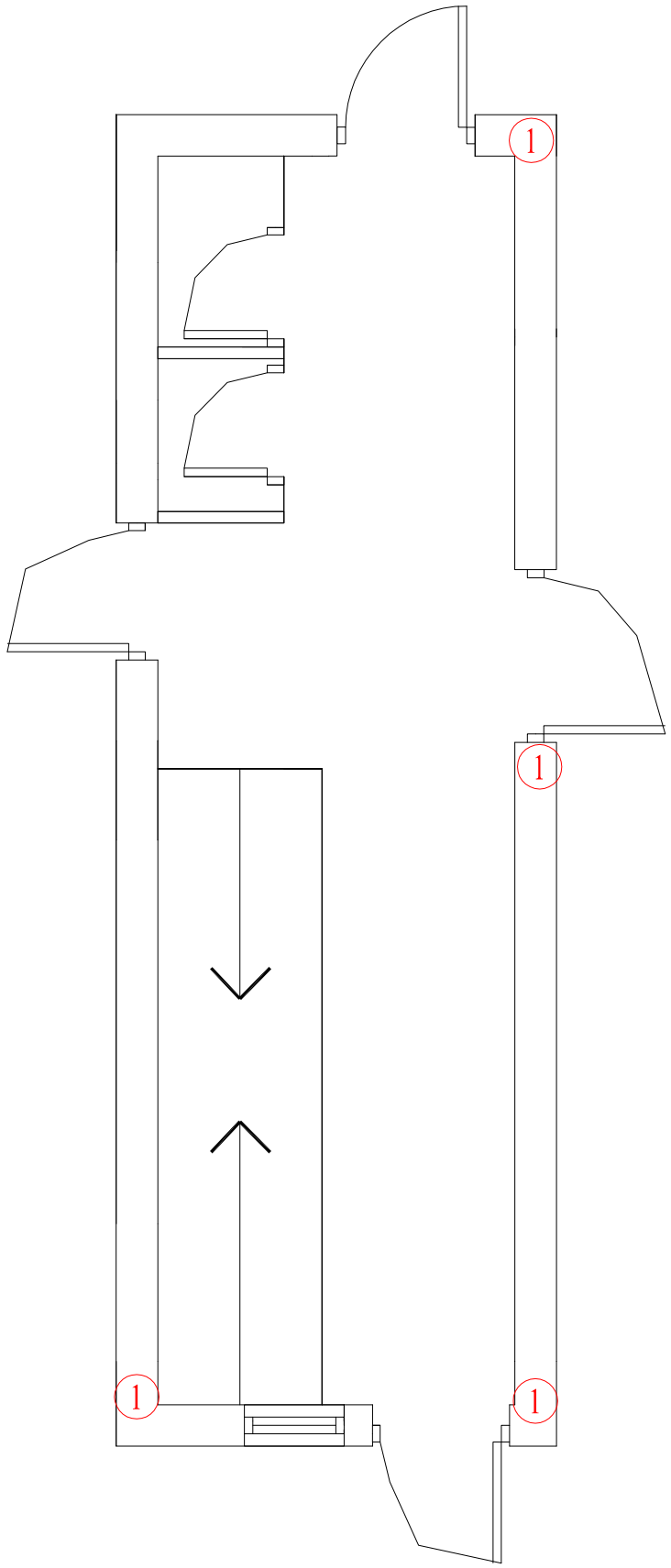

COMMUNAL STAIRCASE GROUND FLOOR PLAN
ENTRANCE ONE
(Scale 1:30)

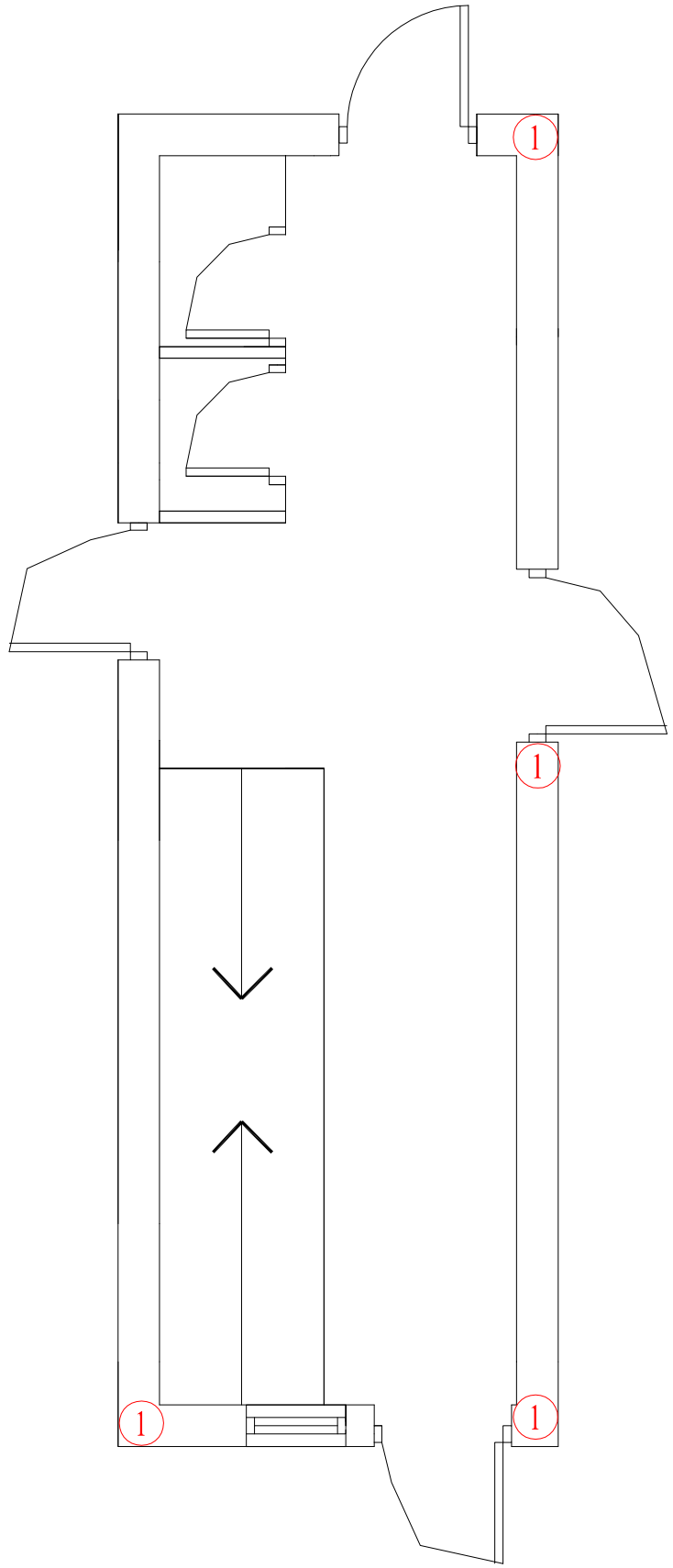

COMMUNAL STAIRCASE GROUND FLOOR PLAN
ENTRANCE TWO
(Scale 1:30)

10 30 50
20 40

Do not scale from this drawing.
All dimensions must be checked on site by the Contractor prior to the commencement of any fabrication or building works.
Where applicable, dimensions and details are to be read in conjunction with specialist consultants' drawings and/or other specifications; any disparity is to be brought to the attention of Michael Dyson Associates Limited prior to the commencement of any fabrication or building works.
©This drawing is the property and copyright of Michael Dyson Associates Limited; It shall not be copied to any other party without the express written consent of an authorised director of Michael Dyson Associates Limited.

NOTES

REV	DATE	AMENDMENTS	BY	APR'D

West House, Meltham Road, Honley,
Huddersfield HD9 6LB
t. 01484 666888 f. 01484 664186
w. www.mdyson.co.uk

CLIENT :
RPS PLANNING AND DEVELOPMENT

PROJECT :
STRUCTURAL SURVEYS TO 4NR FLATS BLOCKS IN MILTON KEYNES

TITLE :
COMMUNAL STAIRS GROUND FLOOR PLANS, AVON HOUSE 78-100

DRAWN BY :	NG	APPROVED BY :	
DATE :	09-09-2013	DATE :	
SCALE :	1:30	ORIGINAL DRAWING SIZE 841 x 594 - A1	
DRAWING No :	610-(REEMA)-7551	REV.	

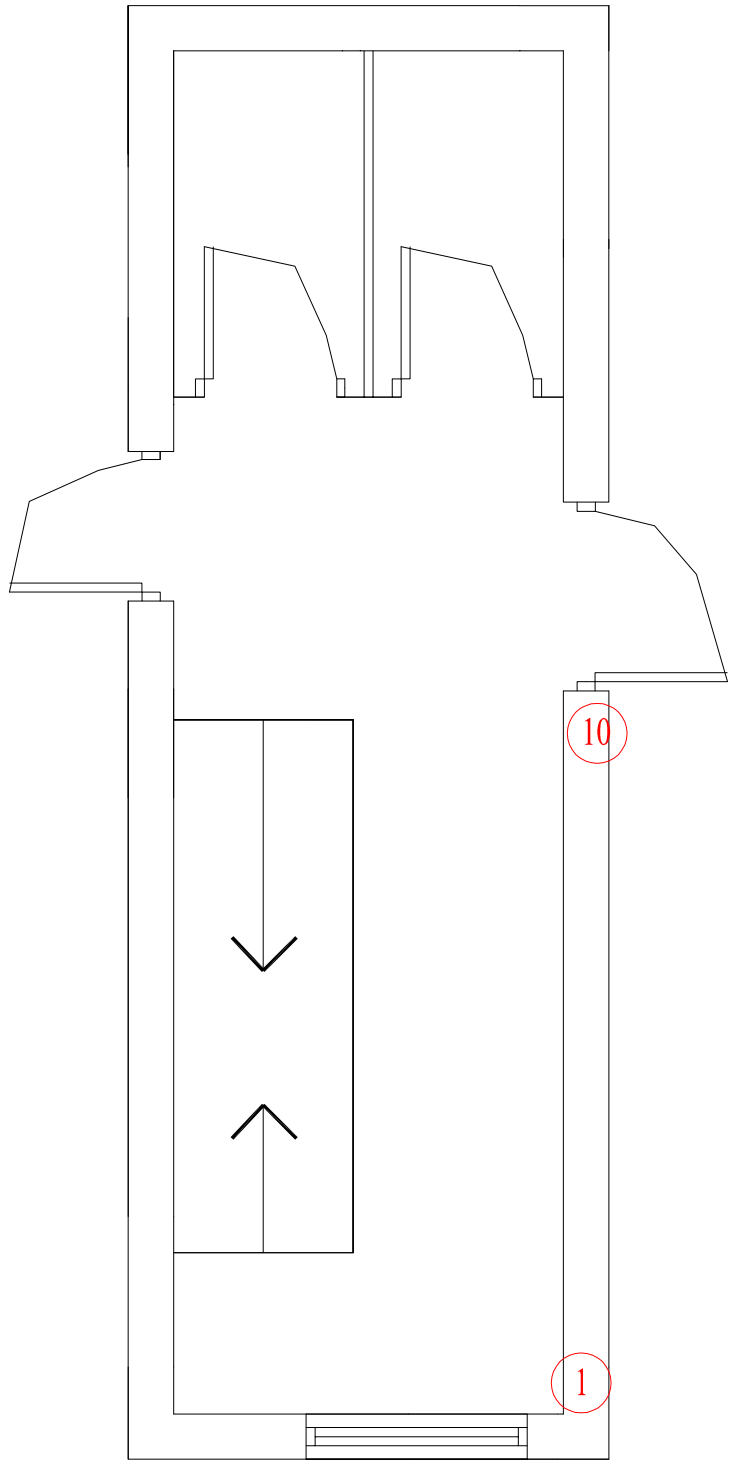

COMMUNAL STAIRCASE FIRST FLOOR PLANS
ENTRANCE ONE
(Scale 1:30)

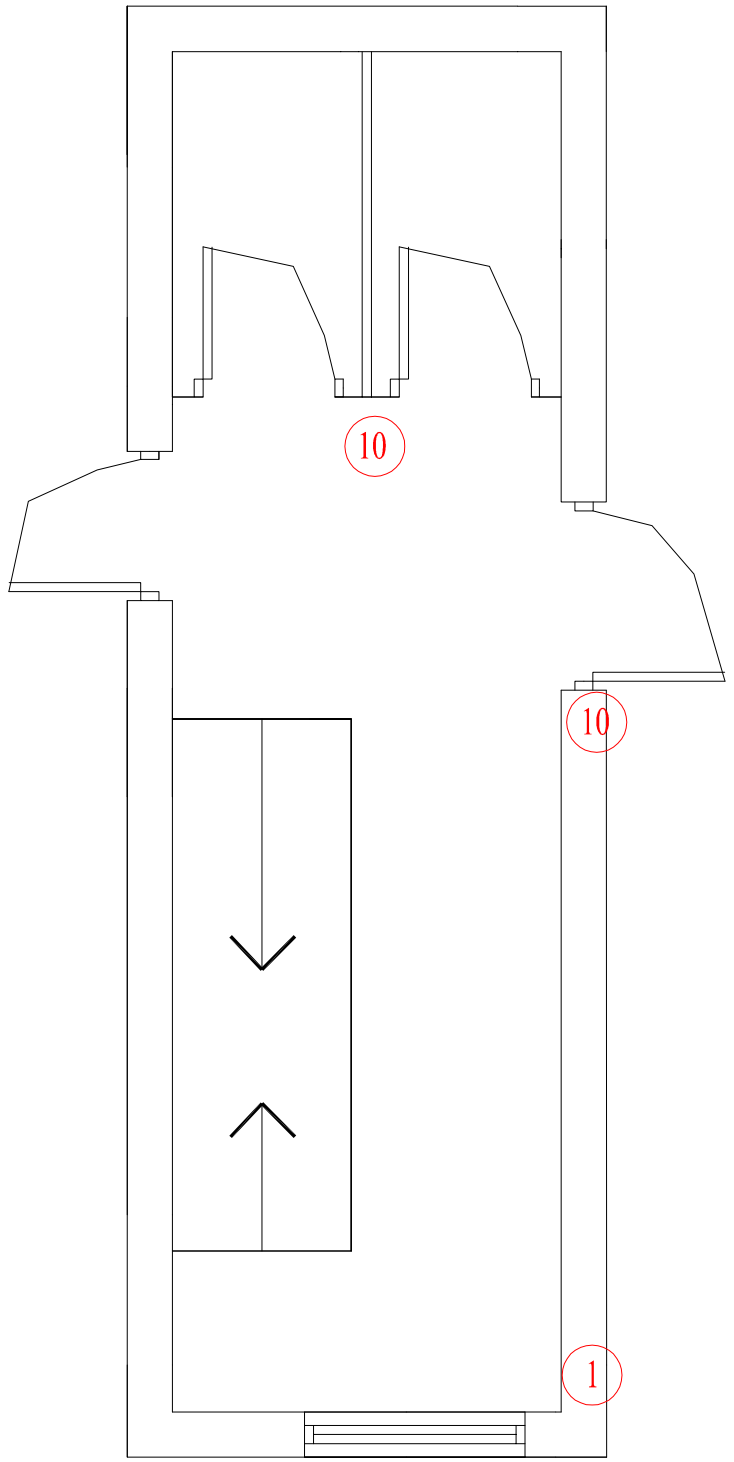

COMMUNAL STAIRCASE FIRST FLOOR PLANS
ENTRANCE TWO
(Scale 1:30)

10 30 50
20 40

Do not scale from this drawing.
All dimensions must be checked on site by the Contractor prior to the commencement of any fabrication or building works.
Where applicable, dimensions and details are to be read in conjunction with specialist consultants' drawings and/or other specifications; any disparity is to be brought to the attention of Michael Dyson Associates Limited prior to the commencement of any fabrication or building works.
©This drawing is the property and copyright of Michael Dyson Associates Limited; It shall not be copied to any other party without the express written consent of an authorised director of Michael Dyson Associates Limited.

NOTES

REV	DATE	AMENDMENTS	BY	APR'D

West House, Meltham Road, Honley,
Huddersfield HD9 6LB
t. 01484 666888 f. 01484 664186
w. www.mdyson.co.uk

CLIENT :
RPS PLANNING & DEVELOPMENT

PROJECT :
STRUCTURAL SURVEYS TO 4NR REEMA FLATS BLOCKS IN MILTON KEYNES

TITLE :
COMMUNAL STAIRCASE FIRST FLOOR PLAN
AVON HOUSE 78-100

DRAWN BY :	NG	APPROVED BY :	
DATE :	09-09-2013	DATE :	
SCALE :	1:30	ORIGINAL DRAWING SIZE 841 x 594 - A1	
DRAWING No :	611-(REEMA)-7551	REV.	

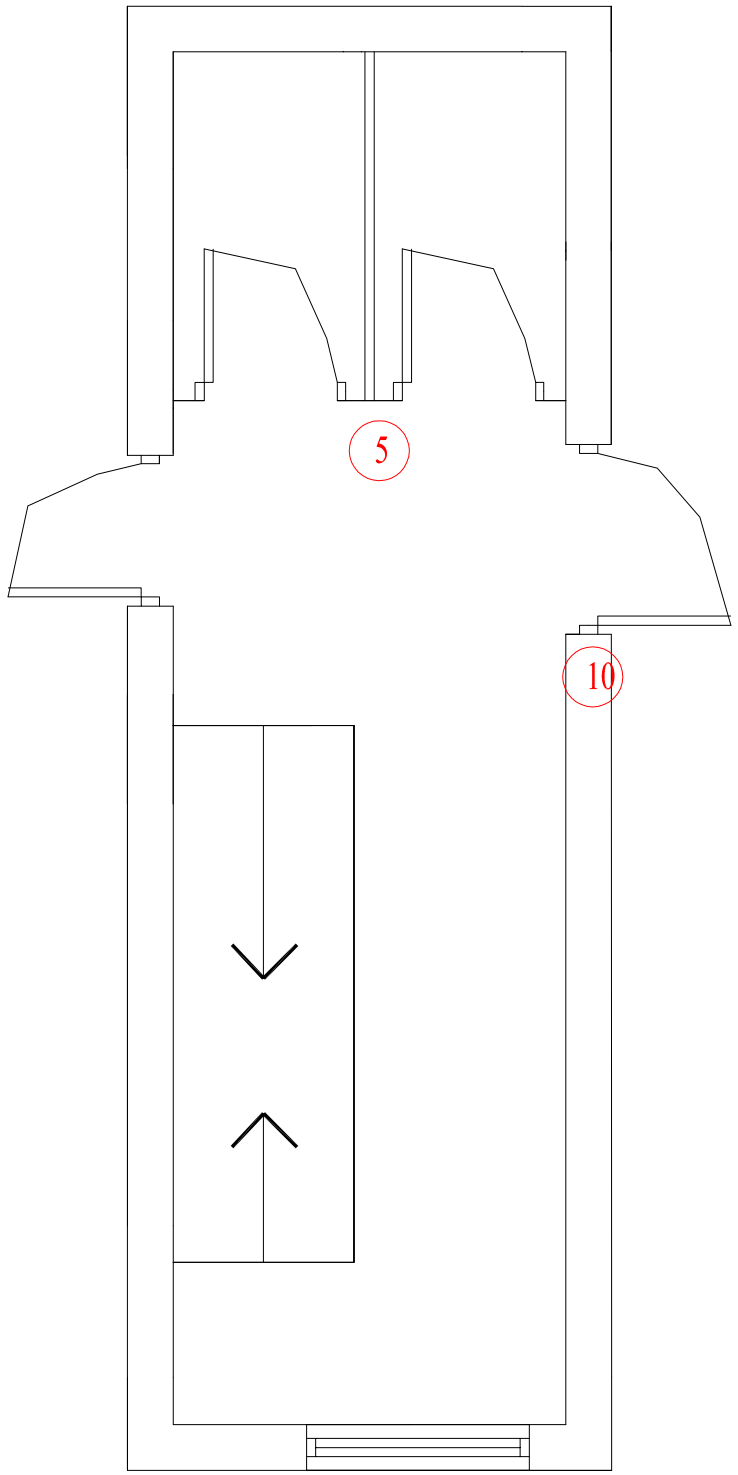

COMMUNAL STAIRCASE SECOND FLOOR PLANS
ENTRANCE ONE
(Scale 1:30)

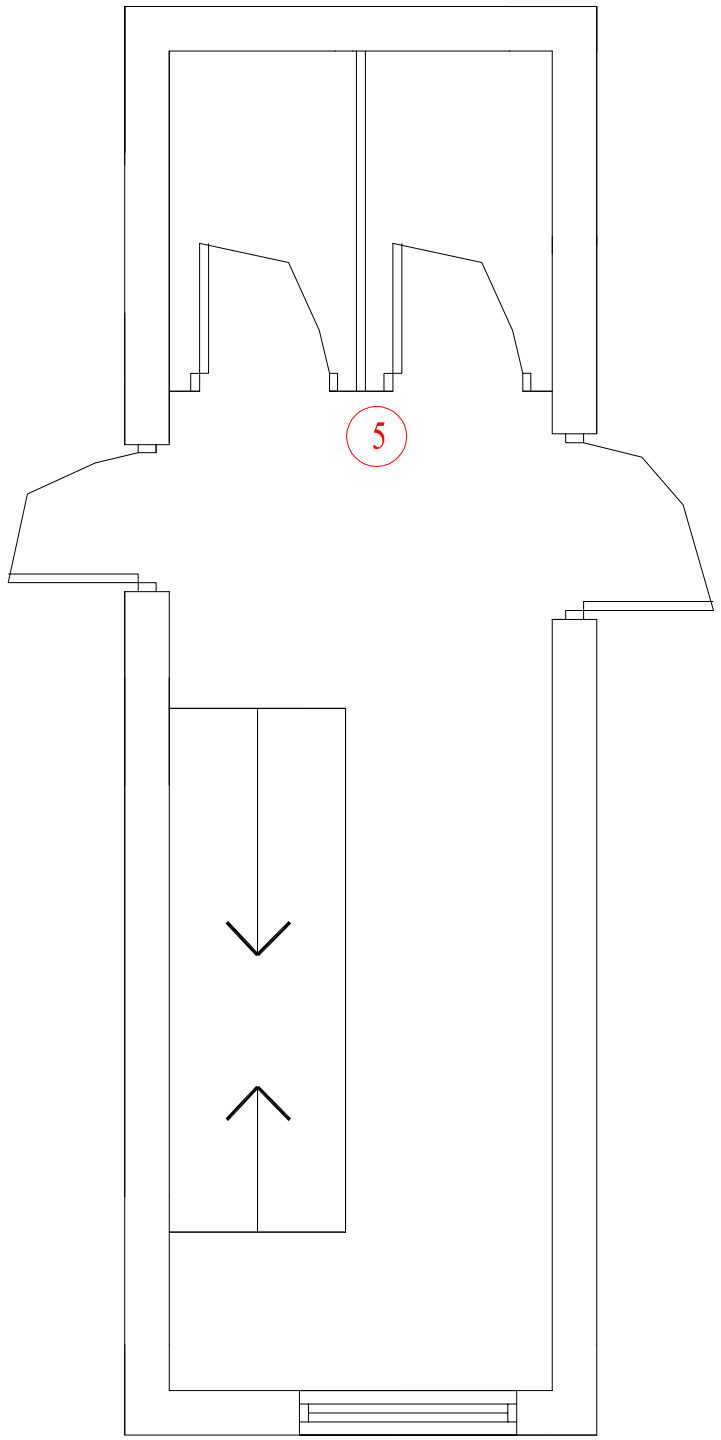

COMMUNAL STAIRCASE SECOND FLOOR PLANS
ENTRANCE TWO
(Scale 1:30)

10 30 50
20 40

Do not scale from this drawing.
All dimensions must be checked on site by the Contractor prior to the commencement of any fabrication or building works.
Where applicable, dimensions and details are to be read in conjunction with specialist consultants' drawings and/or other specifications; any disparity is to be brought to the attention of Michael Dyson Associates Limited prior to the commencement of any fabrication or building works.
©This drawing is the property and copyright of Michael Dyson Associates Limited; It shall not be copied to any other party without the express written consent of an authorised director of Michael Dyson Associates Limited.

NOTES

REV	DATE	AMENDMENTS	BY	APR'D

West House, Meltham Road, Honley,
Huddersfield HD9 6LB
t. 01484 666888 f. 01484 664186
w. www.mdyson.co.uk

CLIENT :
R5PS PLANNING & DEVELOPMENT

PROJECT :
STRUCTURAL SURVEY OF 4NR REEMA FLATS BLOCKS IN MILTON KEYNES

TITLE :
COMMUNAL STAIRCASE SECOND FLOOR PLAN AVON HOUSE 78-100

DRAWN BY :	NG	APPROVED BY :	
DATE :	09-09-2013	DATE :	
SCALE :	1:30	ORIGINAL DRAWING SIZE 841 x 594 - A1	
DRAWING No :	612-(REEMA)-7551	REV.	

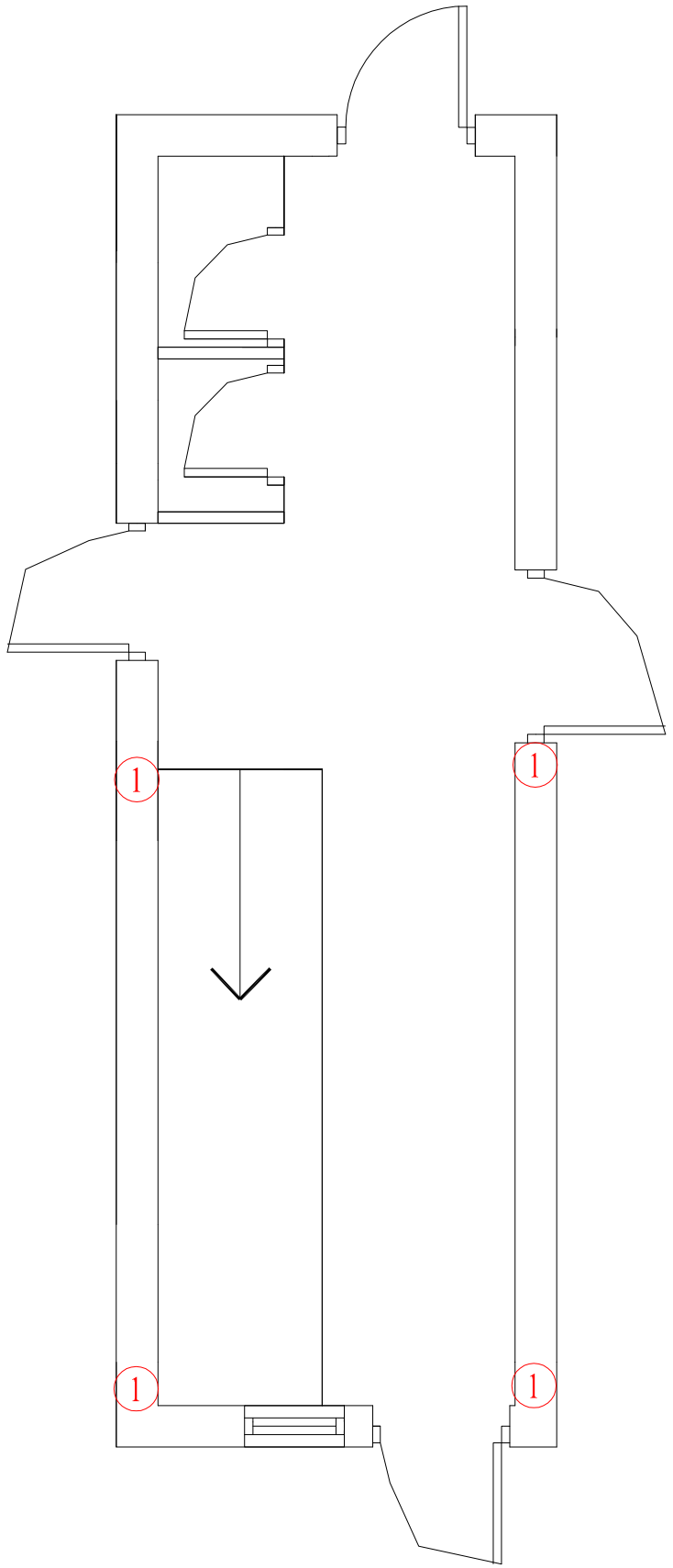

COMMUNAL STAIRCASE GROUND FLOOR PLAN
ENTRANCE ONE
(Scale 1:30)

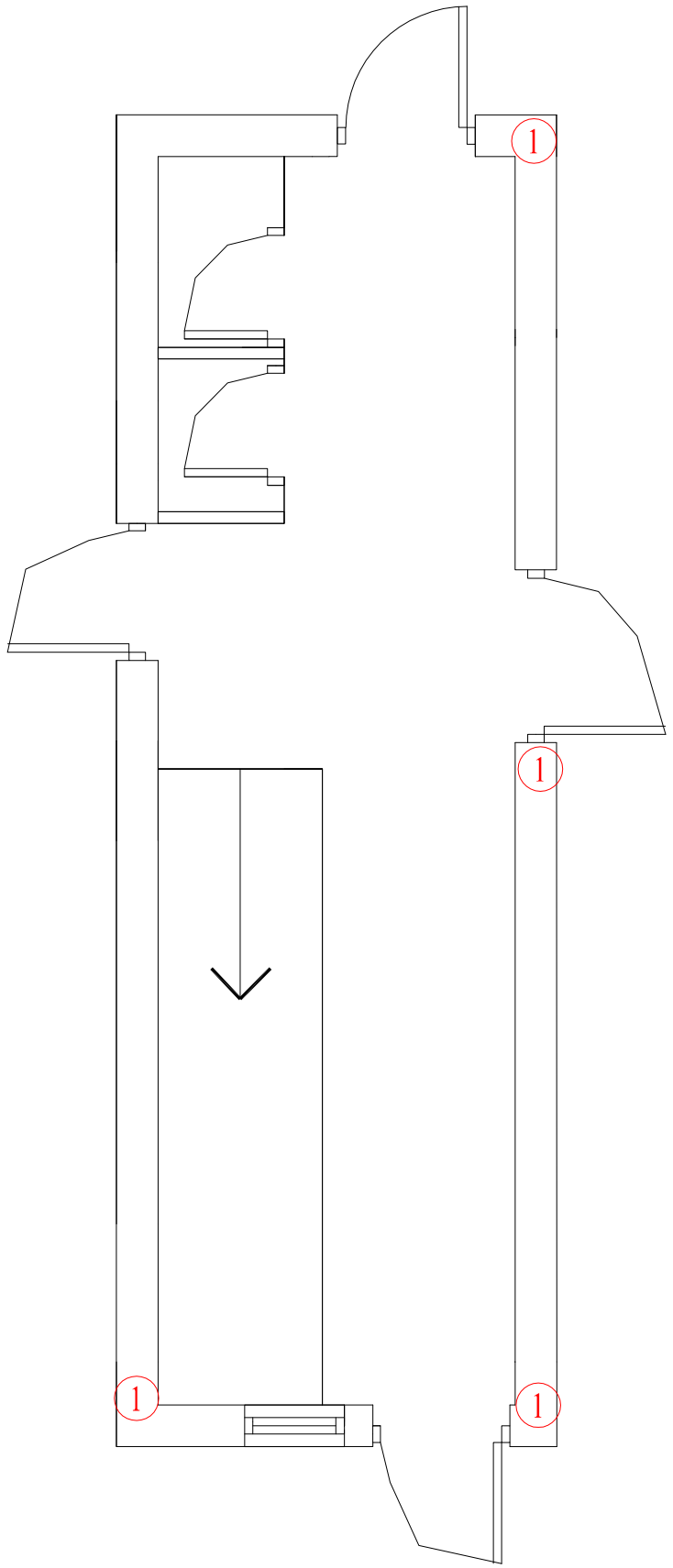

COMMUNAL STAIRCASE GROUND FLOOR PLAN
ENTRANCE TWO
(Scale 1:30)

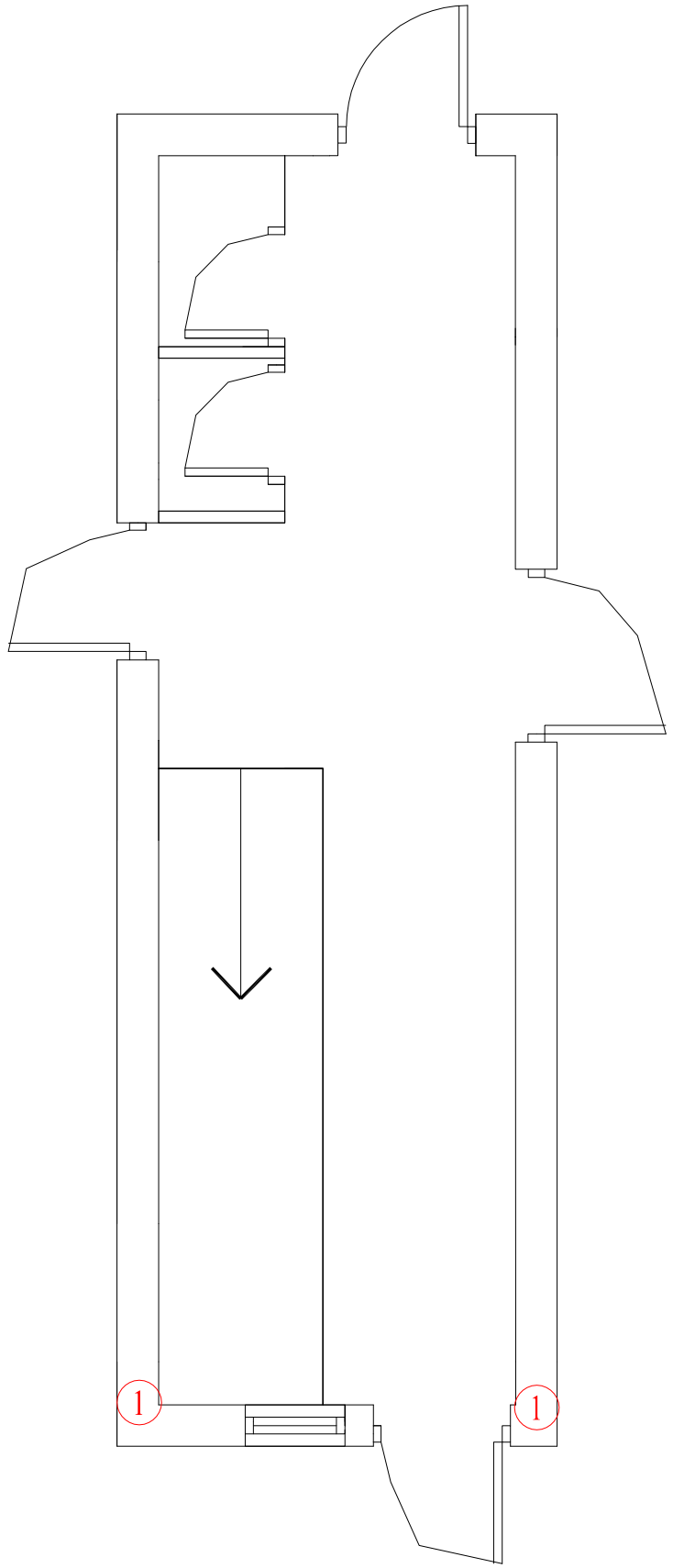

COMMUNAL STAIRCASE GROUND FLOOR PLAN
ENTRANCE THREE
(Scale 1:30)

10 30 50
20 40

Do not scale from this drawing.
All dimensions must be checked on site by the Contractor prior to the commencement of any fabrication or building works.
Where applicable, dimensions and details are to be read in conjunction with specialist consultants' drawings and/or other specifications; any disparity is to be brought to the attention of Michael Dyson Associates Limited prior to the commencement of any fabrication or building works.
©This drawing is the property and copyright of Michael Dyson Associates Limited; It shall not be copied to any other party without the express written consent of an authorised director of Michael Dyson Associates Limited.

NOTES

REV	DATE	AMENDMENTS	BY	APR'D

West House, Meltham Road, Honley,
Huddersfield HD9 6LB
t. 01484 666888 f. 01484 664186
w. www.mdyson.co.uk

CLIENT :
RPS PLANNING AND DEVELOPMENT

PROJECT :
STRUCTURAL SURVEYS TO 4NR FLATS BLOCKS IN MILTON KEYNES

TITLE :
COMMUNAL STAIRS GROUND FLOOR PLANS, CHERWELL HOUSE

DRAWN BY :	NG	APPROVED BY :	
DATE :	09-09-2013	DATE :	
SCALE :	1:30	ORIGINAL DRAWING SIZE 841 x 594 - A1	
DRAWING No :	510-(REEMA)-7551	REV.	

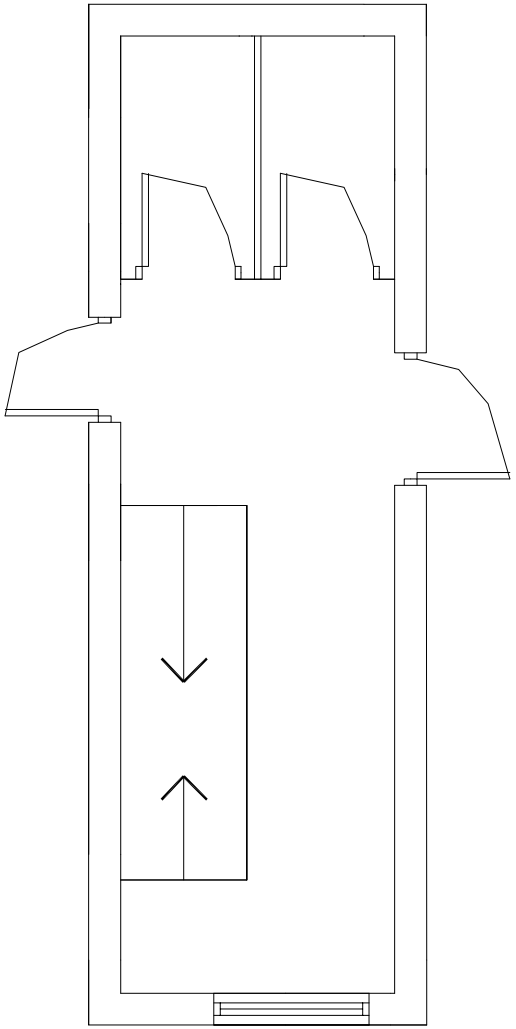

COMMUNAL STAIRCASE FIRST FLOOR PLANS
ENTRANCE ONE
(Scale 1:30)

NO DEFECTS

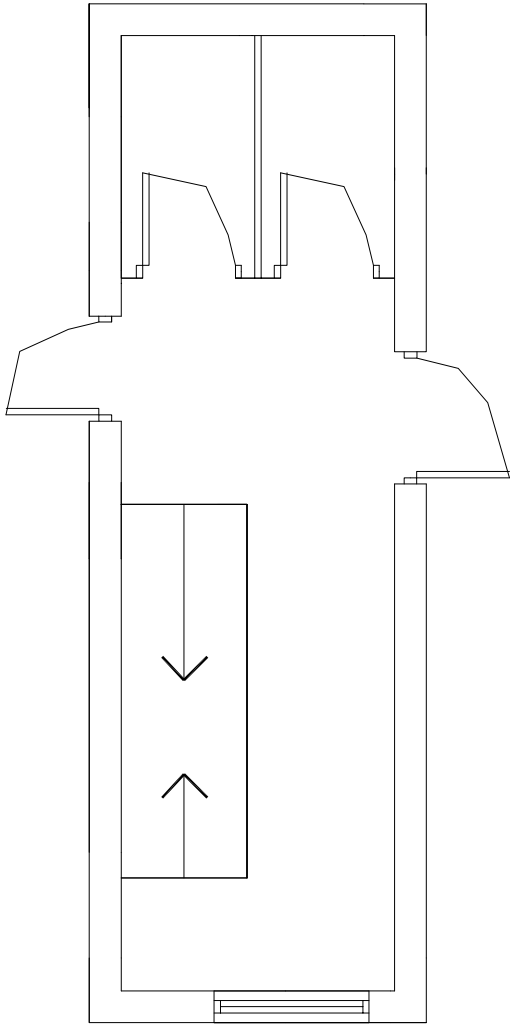

COMMUNAL STAIRCASE FIRST FLOOR PLANS
ENTRANCE TWO
(Scale 1:30)

NO DEFECTS

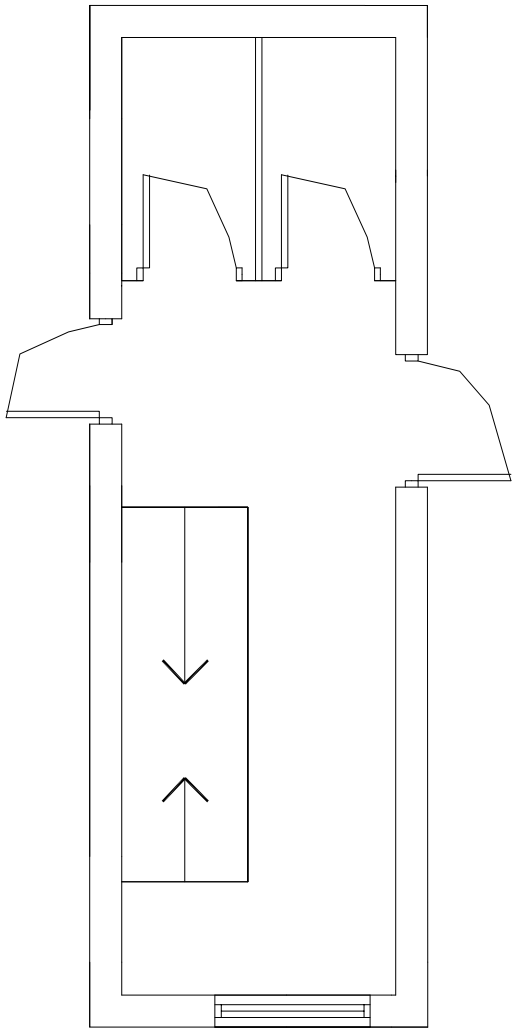

COMMUNAL STAIRCASE FIRST FLOOR PLANS
ENTRANCE THREE
(Scale 1:30)

NO DEFECTS

10 30 50
20 40

Do not scale from this drawing.
All dimensions must be checked on site by the Contractor prior to the commencement of any fabrication or building works.
Where applicable, dimensions and details are to be read in conjunction with specialist consultants' drawings and/or other specifications; any disparity is to be brought to the attention of Michael Dyson Associates Limited prior to the commencement of any fabrication or building works.
©This drawing is the property and copyright of Michael Dyson Associates Limited; It shall not be copied to any other party without the express written consent of an authorised director of Michael Dyson Associates Limited.

NOTES

REV	DATE	AMENDMENTS	BY	APRD

West House, Meltham Road, Honley,
Huddersfield HD9 6LB
t. 01484 666888 f. 01484 664186
w. www.mdyson.co.uk

CLIENT :
RPS PLANNING & DEVELOPMENT

PROJECT :
STRUCTURAL SURVEYS TO 4NR REEMA FLATS BLOCKS IN MILTON KEYNES

TITLE :
COMMUNAL STAIRCASE FIRST FLOOR PLAN
CHERWELL HOUSE

DRAWN BY :	NG	APPROVED BY :	
DATE :	09-09-2013	DATE :	
SCALE :	1:30	ORIGINAL DRAWING SIZE 841 x 594 - A1	
DRAWING No :	511-(REEMA)-7551	REV.	

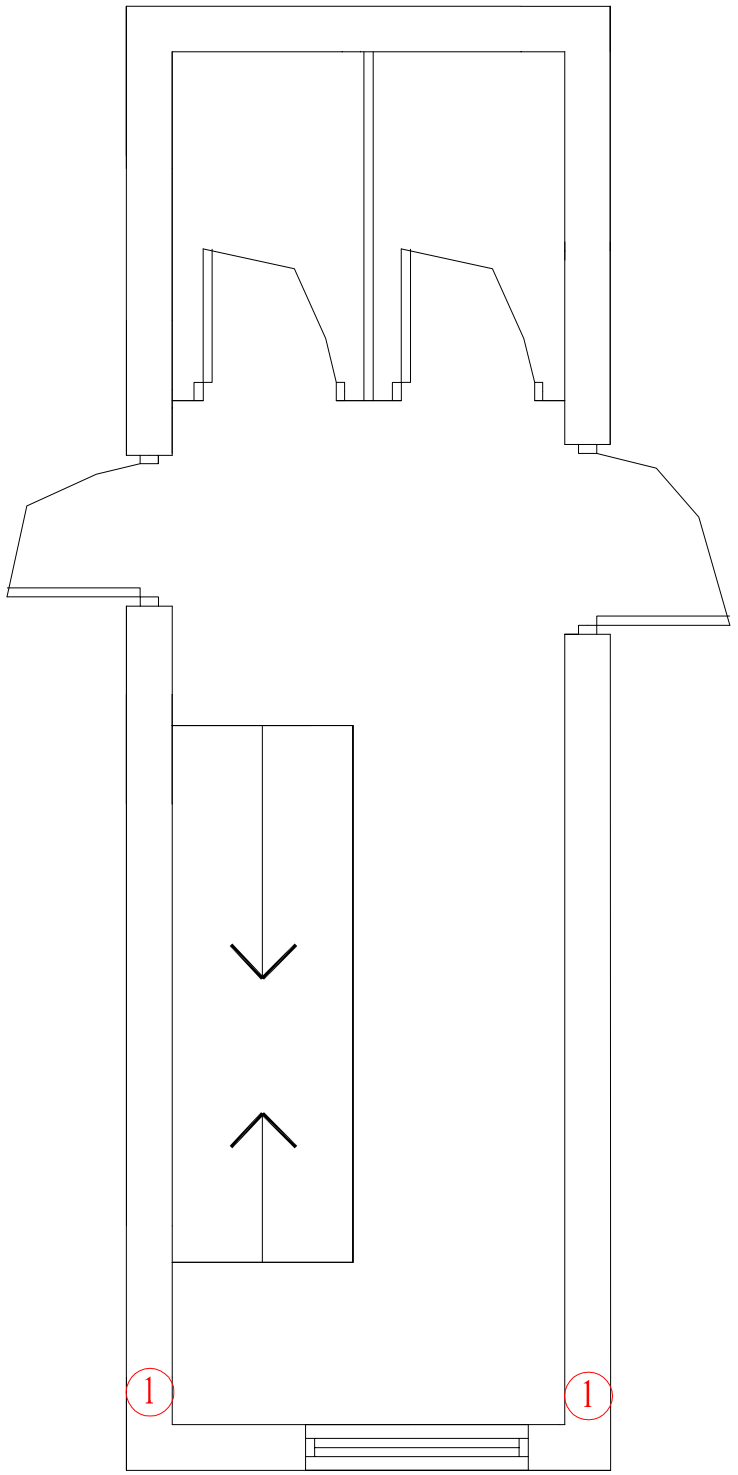

COMMUNAL STAIRCASE SECOND FLOOR PLANS
ENTRANCE ONE
(Scale 1:30)

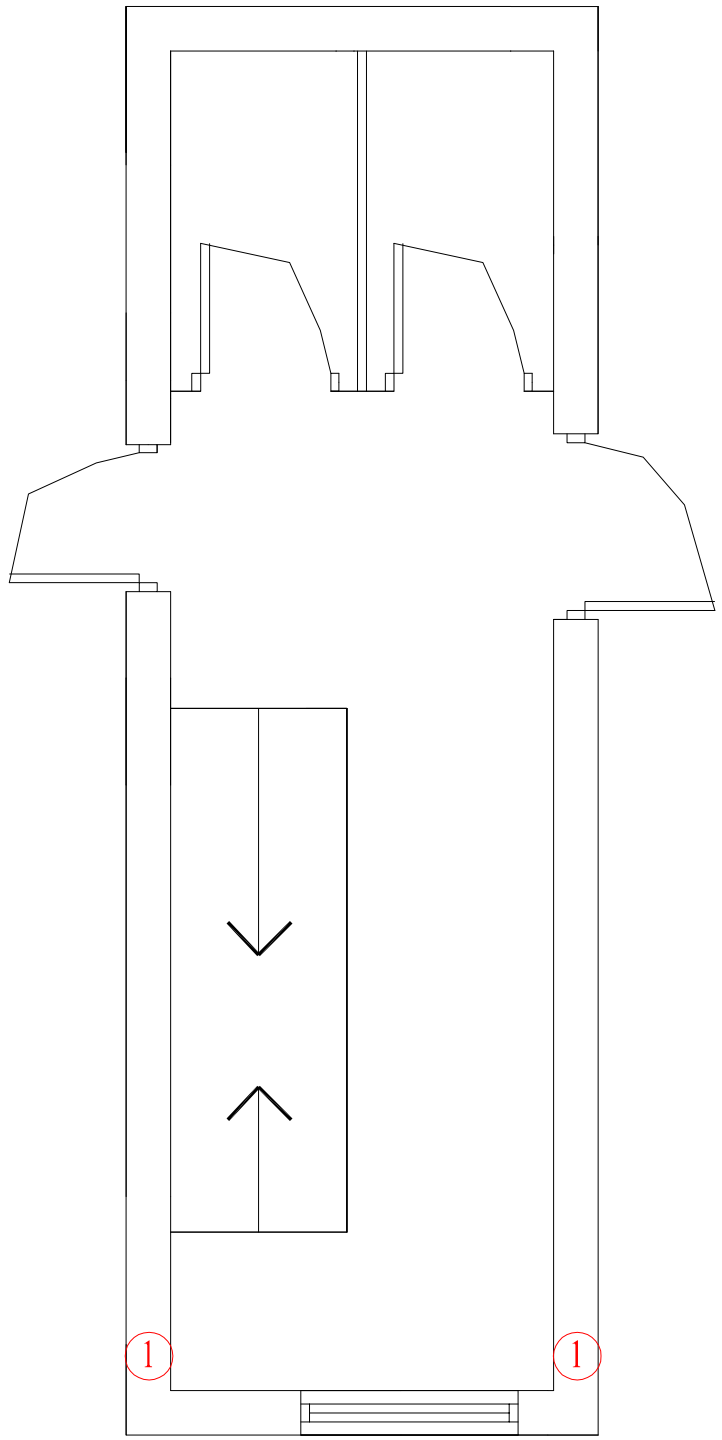

COMMUNAL STAIRCASE SECOND FLOOR PLANS
ENTRANCE TWO
(Scale 1:30)

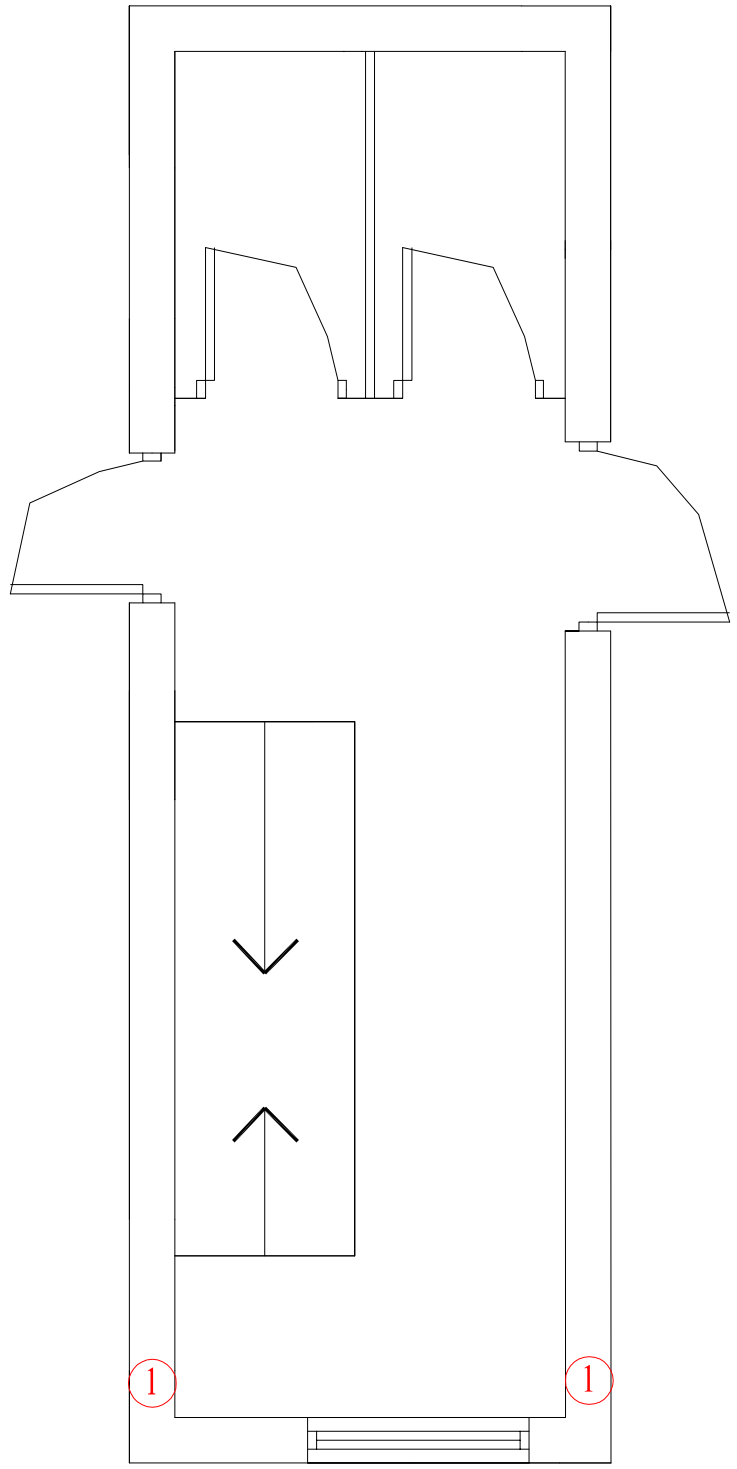

COMMUNAL STAIRCASE SECOND FLOOR PLANS
ENTRANCE THREE
(Scale 1:30)

10 30 50
20 40

Do not scale from this drawing.
All dimensions must be checked on site by the Contractor prior to the commencement of any fabrication or building works.
Where applicable, dimensions and details are to be read in conjunction with specialist consultants' drawings and/or other specifications; any disparity is to be brought to the attention of Michael Dyson Associates Limited prior to the commencement of any fabrication or building works.
©This drawing is the property and copyright of Michael Dyson Associates Limited; It shall not be copied to any other party without the express written consent of an authorised director of Michael Dyson Associates Limited.

NOTES

REV	DATE	AMENDMENTS	BY	APR'D

West House, Meltham Road, Honley,
Huddersfield HD9 6LB
t. 01484 666888 f. 01484 664186
w. www.mdyson.co.uk

CLIENT :
R5PS PLANNING & DEVELOPMENT

PROJECT :
STRUCTURAL SURVEY OF 4NR REEMA FLATS BLOCKS IN MILTON KEYNES

TITLE :
COMMUNAL STAIRCASE SECOND FLOOR PLAN
CHERWELL HOUSE

DRAWN BY :	NG	APPROVED BY :	
DATE :	09-09-2013	DATE :	
SCALE :	1:30	ORIGINAL DRAWING SIZE 841 x 594 - A1	
DRAWING No :	512-(REEMA)-7551	REV.	

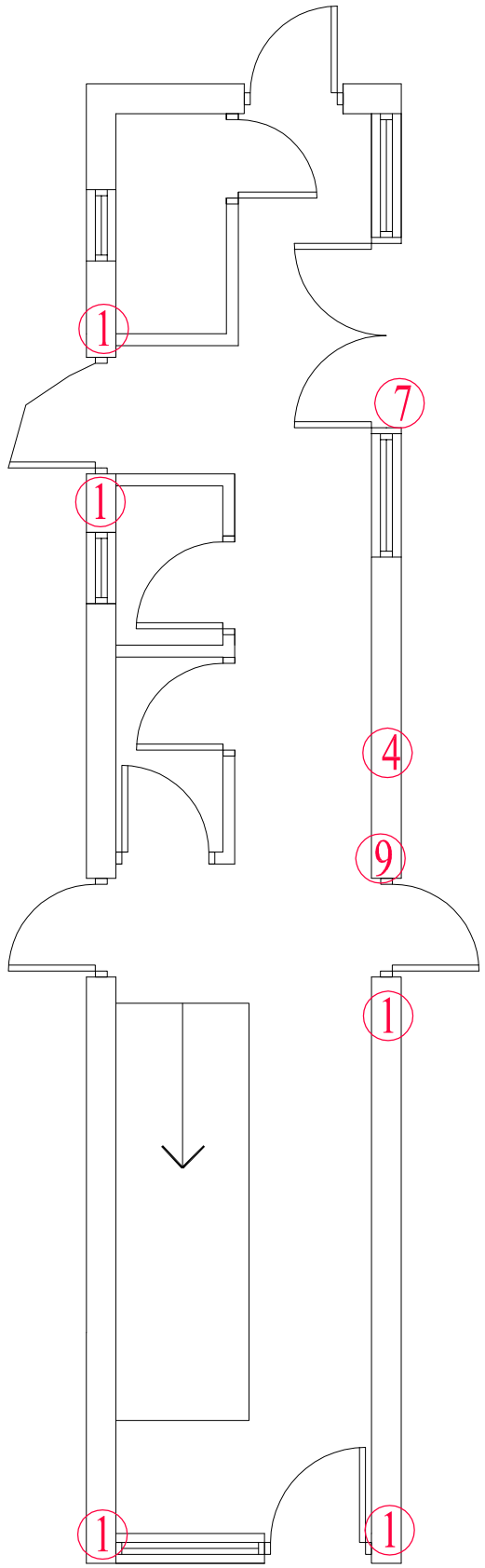

COMMUNAL STAIRCASE GROUND FLOOR PLAN
(Scale 1:30)

10 30 50
20 40

Do not scale from this drawing.
All dimensions must be checked on site by the Contractor prior to the commencement of any fabrication or building works.
Where applicable, dimensions and details are to be read in conjunction with specialist consultants' drawings and/or other specifications; any disparity is to be brought to the attention of Michael Dyson Associates Limited prior to the commencement of any fabrication or building works.
©This drawing is the property and copyright of Michael Dyson Associates Limited; It shall not be copied to any other party without the express written consent of an authorised director of Michael Dyson Associates Limited.

NOTES

REV	DATE	AMENDMENTS	BY	APR'D

West House, Meltham Road, Honley,
Huddersfield HD9 6LB
t. 01484 666888 f. 01484 664186
w. www.mdyson.co.uk

CLIENT :
RPS PLANNING AND DEVELOPMENT

PROJECT :
STRUCTURAL SURVEYS TO 4NR FLATS BLOCKS IN MILTON KEYNES

TITLE :
COMMUNAL STAIRS GROUND FLOOR PLANS, DOUNE HOUSE

DRAWN BY :	NG	APPROVED BY :	
DATE :	28-08-2013	DATE :	
SCALE :	1:30	ORIGINAL DRAWING SIZE 841 x 594 - A1	
DRAWING No :	1510-(REEMA)-7551	REV.	

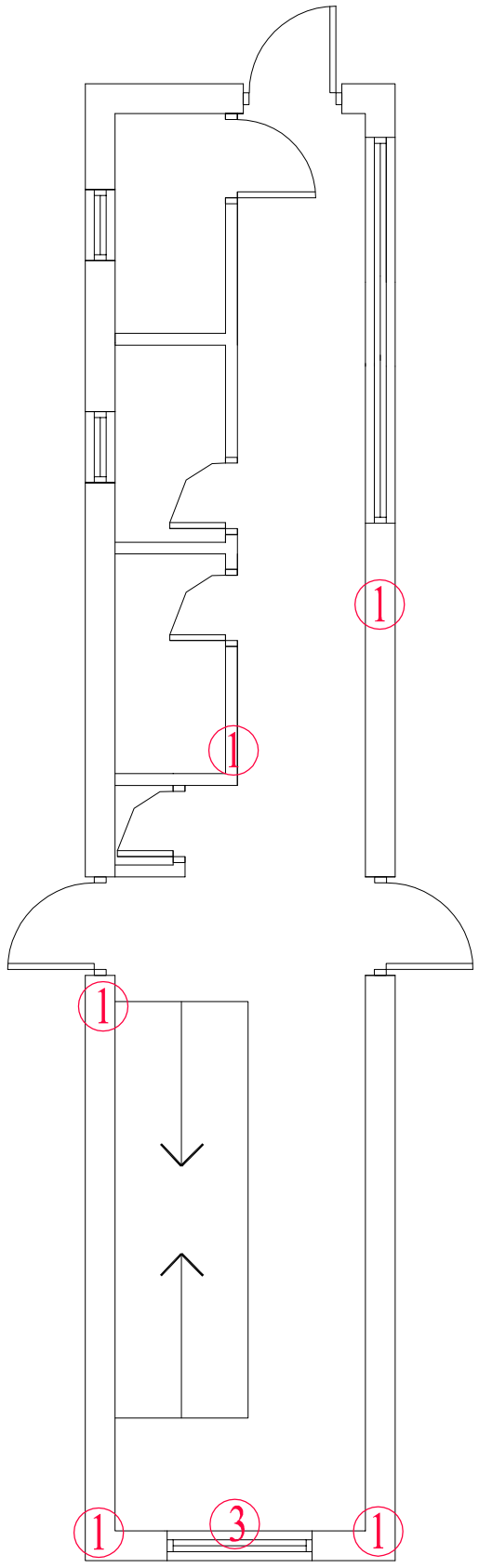

COMMUNAL STAIRCASE FIRST FLOOR PLANS
(Scale 1:30)

10 30 50
20 40

Do not scale from this drawing.
All dimensions must be checked on site by the Contractor prior to the commencement of any fabrication or building works.
Where applicable, dimensions and details are to be read in conjunction with specialist consultants' drawings and/or other specifications; any disparity is to be brought to the attention of Michael Dyson Associates Limited prior to the commencement of any fabrication or building works.
©This drawing is the property and copyright of Michael Dyson Associates Limited; It shall not be copied to any other party without the express written consent of an authorised director of Michael Dyson Associates Limited.

NOTES

REV	DATE	AMENDMENTS	BY	APR'D

West House, Meltham Road, Honley,
Huddersfield HD9 6LB
t. 01484 666888 f. 01484 664186
w. www.mdyson.co.uk

CLIENT :
RPS PLANNING & DEVELOPMENT

PROJECT :
STRUCTURAL SURVEYS TO 4NR REEMA FLATS BLOCKS IN MILTON KEYNES

TITLE :
COMMUNAL STAIRCASE FIRST FLOOR PLAN
DOUNE HOUSE

DRAWN BY :	NG	APPROVED BY :	
DATE :	28-08-2013	DATE :	
SCALE :	1:30	ORIGINAL DRAWING SIZE 841 x 594 - A1	
DRAWING No :	1511-(REEMA)-7551	REV.	

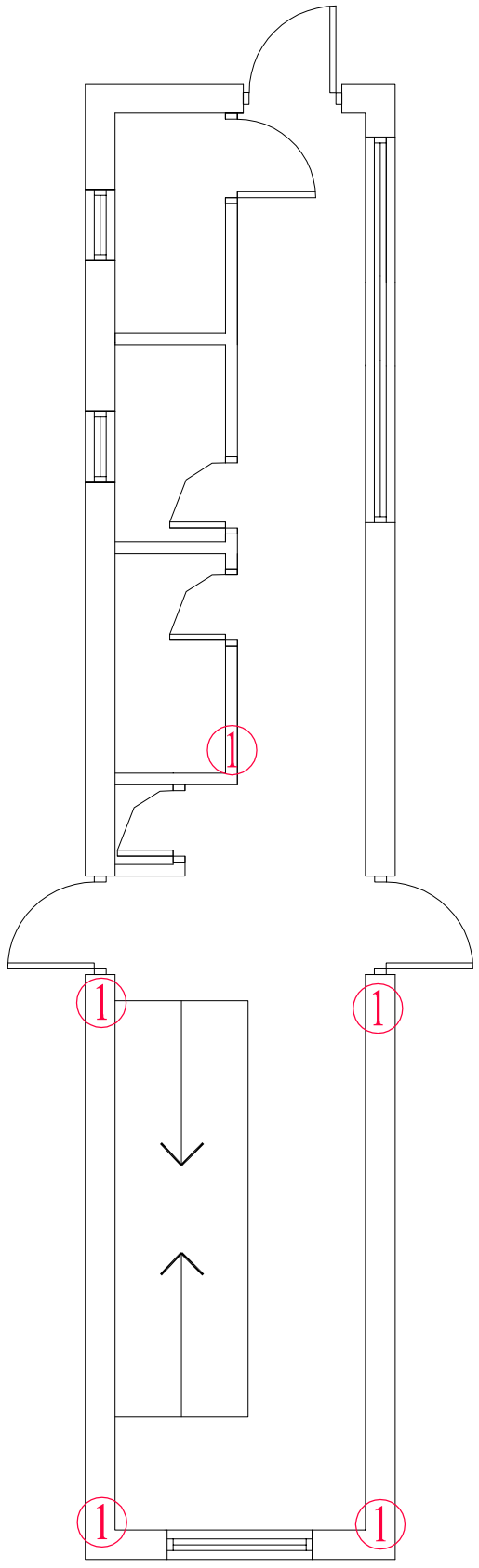

COMMUNAL STAIRCASE SECOND FLOOR PLANS
(Scale 1:30)

10 30 50
20 40

Do not scale from this drawing.
All dimensions must be checked on site by the Contractor prior to the commencement of any fabrication or building works.
Where applicable, dimensions and details are to be read in conjunction with specialist consultants' drawings and/or other specifications; any disparity is to be brought to the attention of Michael Dyson Associates Limited prior to the commencement of any fabrication or building works.
©This drawing is the property and copyright of Michael Dyson Associates Limited; It shall not be copied to any other party without the express written consent of an authorised director of Michael Dyson Associates Limited.

NOTES

REV	DATE	AMENDMENTS	BY	APR'D

West House, Meltham Road, Honley,
Huddersfield HD9 6LB
t. 01484 666888 f. 01484 664186
w. www.mdyson.co.uk

CLIENT :
R5PS PLANNING & DEVELOPMENT

PROJECT :
STRUCTURAL SURVEY OF 4NR REEMA FLATS BLOCKS IN MILTON KEYNES

TITLE :
COMMUNAL STAIRCASE SECOND FLOOR PLAN DOUNE HOUSE

DRAWN BY :	NG	APPROVED BY :	
DATE :	28-08-2013	DATE :	
SCALE :	1:30	ORIGINAL DRAWING SIZE 841 x 594 - A1	
DRAWING No :	1512-(REEMA)-7551	REV.	

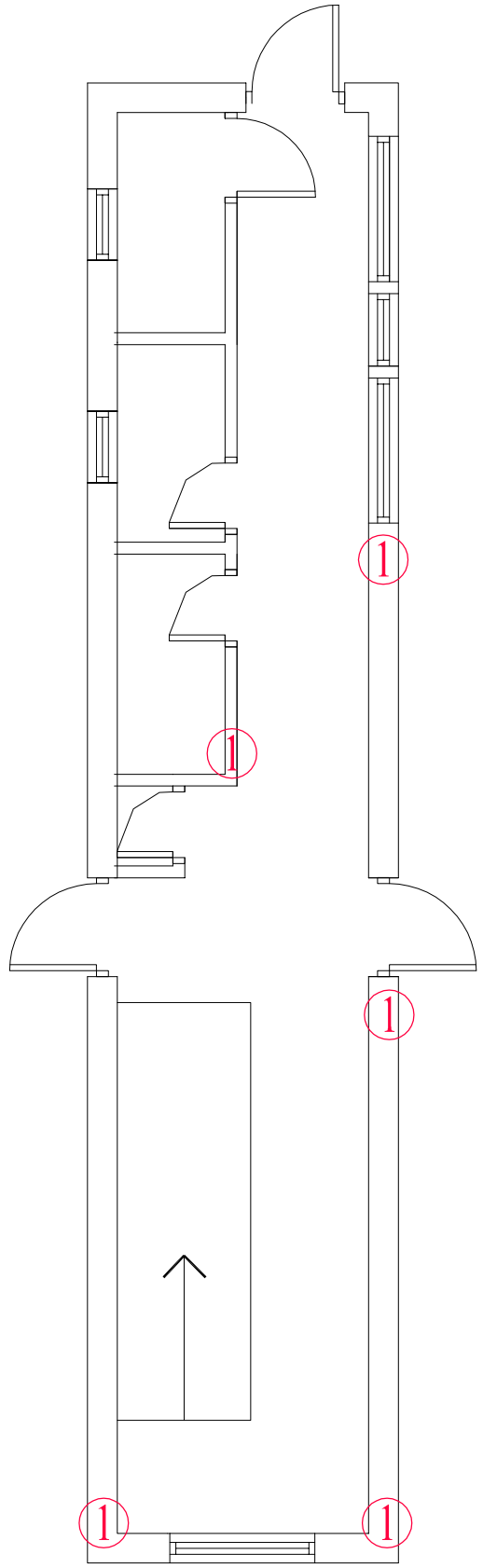

COMMUNAL STAIRCASE THIRD FLOOR PLAN
(Scale 1:30)

10 30 50
20 40

Do not scale from this drawing.
All dimensions must be checked on site by the Contractor prior to the commencement of any fabrication or building works.
Where applicable, dimensions and details are to be read in conjunction with specialist consultants' drawings and/or other specifications; any disparity is to be brought to the attention of Michael Dyson Associates Limited prior to the commencement of any fabrication or building works.
©This drawing is the property and copyright of Michael Dyson Associates Limited; It shall not be copied to any other party without the express written consent of an authorised director of Michael Dyson Associates Limited.

NOTES

REV	DATE	AMENDMENTS	BY	APR'D

West House, Meltham Road, Honley,
Huddersfield HD9 6LB
t. 01484 666888 f. 01484 664186
w. www.mdyson.co.uk

CLIENT :

RPS PLANNING & DEVELOPMENT

PROJECT :

STRUCTURAL SURVEY TO 4NR REEMA FLATS BLOCKS IN MILTON KEYNES

TITLE :

COMMUNAL STAIRCASE THIRD FLOOR PLAN
DOUNE HOUSE

DRAWN BY :	NG	APPROVED BY :	
DATE :	28-08-2013	DATE :	
SCALE :	1:30	ORIGINAL DRAWING SIZE 841 x 594 - A1	
DRAWING No :	1513-(Reema)-7551	REV.	

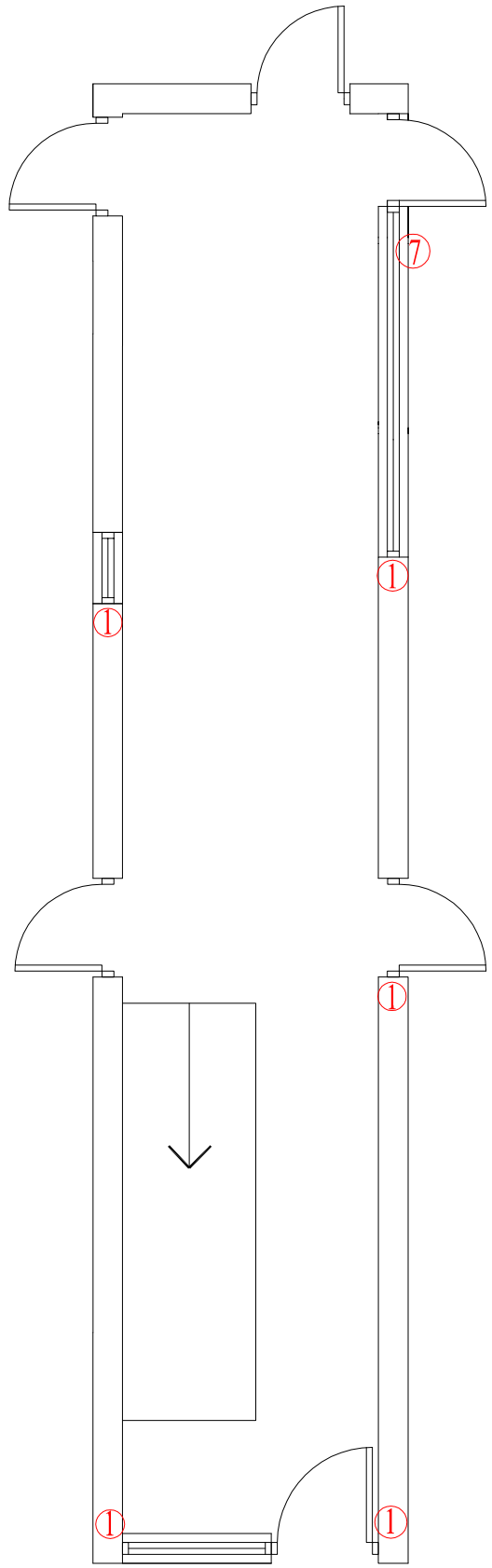

COMMUNAL STAIRCASE GROUND FLOOR PLAN
(Scale 1:30)

10 30 50
20 40

Do not scale from this drawing.
All dimensions must be checked on site by the Contractor prior to the commencement of any fabrication or building works.
Where applicable, dimensions and details are to be read in conjunction with specialist consultants' drawings and/or other specifications; any disparity is to be brought to the attention of Michael Dyson Associates Limited prior to the commencement of any fabrication or building works.
©This drawing is the property and copyright of Michael Dyson Associates Limited; It shall not be copied to any other party without the express written consent of an authorised director of Michael Dyson Associates Limited.

NOTES

REV	DATE	AMENDMENTS	BY	APR'D

West House, Meltham Road, Honley,
Huddersfield HD9 6LB
t. 01484 666888 f. 01484 664186
w. www.mdyson.co.uk

CLIENT :

RPS PLANNING AND DEVELOPMENT

PROJECT :

STRUCTURAL SURVEYS TO 4NR FLATS BLOCKS IN MILTON KEYNES

TITLE :

COMMUNAL STAIRS GROUND FLOOR PLANS, EDINBURGH HOUSE

DRAWN BY :	NG	APPROVED BY :	
DATE :	09-09-2013	DATE :	
SCALE :	1:30	ORIGINAL DRAWING SIZE 841 x 594 - A1	
DRAWING No :	1410-(REEMA)-7551	REV.	

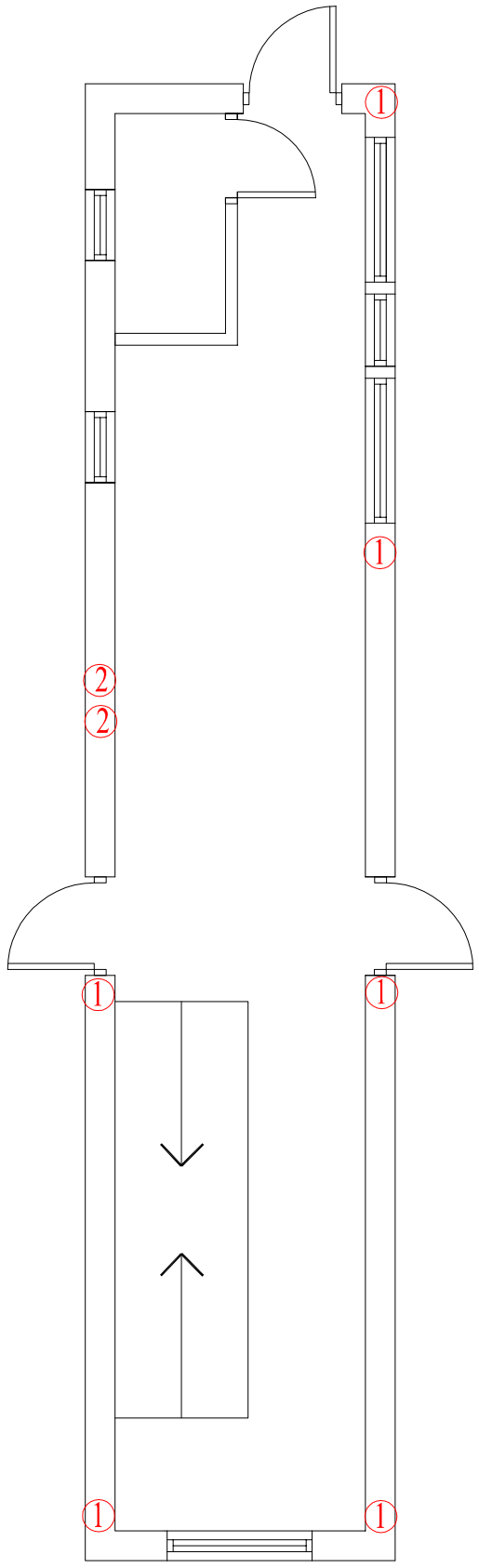

COMMUNAL STAIRCASE FIRST FLOOR PLANS
(Scale 1:30)

10 30 50
20 40

Do not scale from this drawing.
All dimensions must be checked on site by the Contractor prior to the commencement of any fabrication or building works.
Where applicable, dimensions and details are to be read in conjunction with specialist consultants' drawings and/or other specifications; any disparity is to be brought to the attention of Michael Dyson Associates Limited prior to the commencement of any fabrication or building works.
©This drawing is the property and copyright of Michael Dyson Associates Limited; It shall not be copied to any other party without the express written consent of an authorised director of Michael Dyson Associates Limited.

NOTES

REV	DATE	AMENDMENTS	BY	APR'D

West House, Meltham Road, Honley,
Huddersfield HD9 6LB
t. 01484 666888 f. 01484 664186
w. www.mdyson.co.uk

CLIENT :
RPS PLANNING & DEVELOPMENT

PROJECT :
STRUCTURAL SURVEYS TO 4NR REEMA FLATS BLOCKS IN MILTON KEYNES

TITLE :
COMMUNAL STAIRCASE FIRST FLOOR PLAN EDINBURGH HOUSE

DRAWN BY :	NG	APPROVED BY :	
DATE :	09-09-2013	DATE :	
SCALE :	1:30	ORIGINAL DRAWING SIZE 841 x 594 - A1	
DRAWING No :	1411-(REEMA)-7551	REV.	

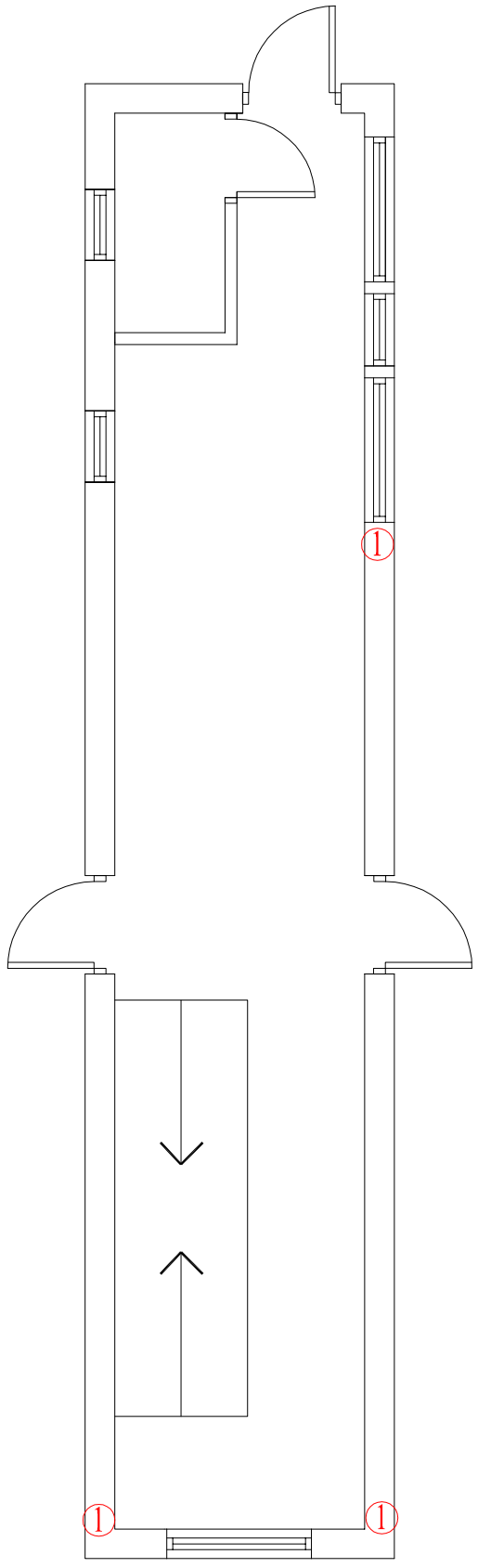

COMMUNAL STAIRCASE SECOND FLOOR PLANS
(Scale 1:30)

10 30 50
20 40

Do not scale from this drawing.
All dimensions must be checked on site by the Contractor prior to the commencement of any fabrication or building works.
Where applicable, dimensions and details are to be read in conjunction with specialist consultants' drawings and/or other specifications; any disparity is to be brought to the attention of Michael Dyson Associates Limited prior to the commencement of any fabrication or building works.
©This drawing is the property and copyright of Michael Dyson Associates Limited; It shall not be copied to any other party without the express written consent of an authorised director of Michael Dyson Associates Limited.

NOTES

REV	DATE	AMENDMENTS	BY	APR'D

West House, Meltham Road, Honley,
Huddersfield HD9 6LB
t. 01484 666888 f. 01484 664186
w. www.mdyson.co.uk

CLIENT :
R5PS PLANNING & DEVELOPMENT

PROJECT :
STRUCTURAL SURVEY OF 4NR REEMA FLATS BLOCKS IN MILTON KEYNES

TITLE :
COMMUNAL STAIRCASE SECOND FLOOR PLAN
EDINBURGH HOUSE

DRAWN BY :	NG	APPROVED BY :	
DATE :	09-09-2013	DATE :	
SCALE :	1:30	ORIGINAL DRAWING SIZE 841 x 594 - A1	
DRAWING No :	1412-(REEMA)-7551	REV.	

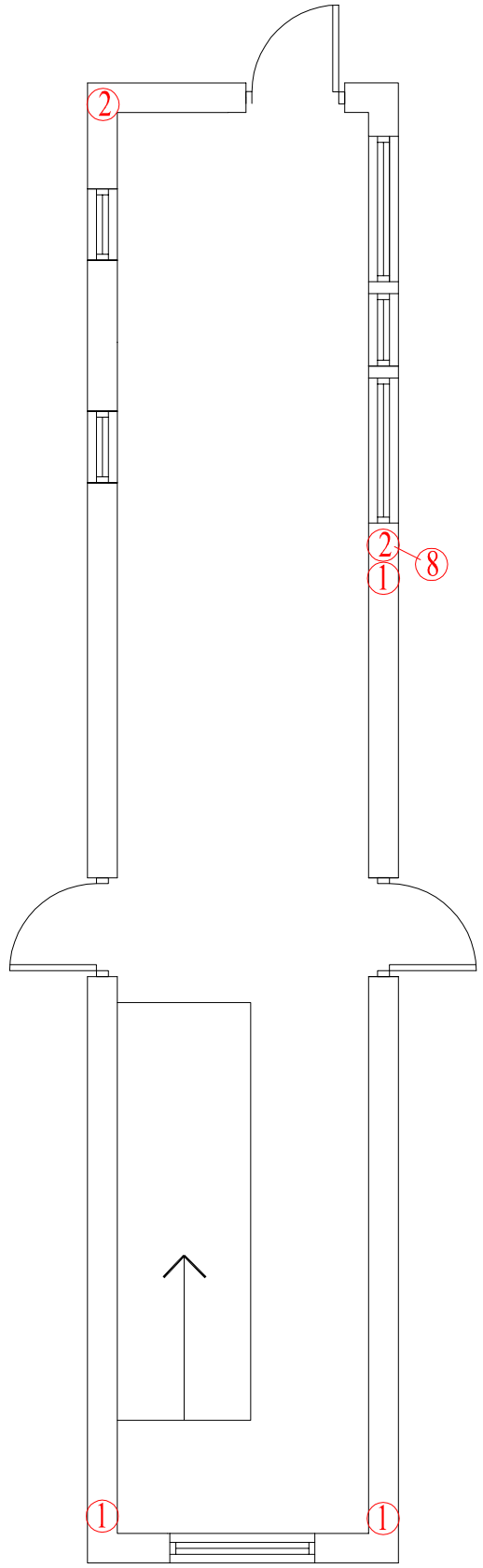

COMMUNAL STAIRCASE THIRD FLOOR PLAN
(Scale 1:30)

10 30 50
20 40

Do not scale from this drawing.
All dimensions must be checked on site by the Contractor prior to the commencement of any fabrication or building works.
Where applicable, dimensions and details are to be read in conjunction with specialist consultants' drawings and/or other specifications; any disparity is to be brought to the attention of Michael Dyson Associates Limited prior to the commencement of any fabrication or building works.
©This drawing is the property and copyright of Michael Dyson Associates Limited; It shall not be copied to any other party without the express written consent of an authorised director of Michael Dyson Associates Limited.

NOTES

REV	DATE	AMENDMENTS	BY	APR'D

West House, Meltham Road, Honley,
Huddersfield HD9 6LB
t. 01484 666888 f. 01484 664186
w. www.mdyson.co.uk

CLIENT :

RPS PLANNING & DEVELOPMENT

PROJECT :

STRUCTURAL SURVEY TO 4NR REEMA FLATS BLOCKS IN MILTON KEYNES

TITLE :

COMMUNAL STAIRCASE THIRD FLOOR PLAN
EDINBURGH HOUSE

DRAWN BY :	NG	APPROVED BY :	
DATE :	09-09-2013	DATE :	
SCALE :	1:30	ORIGINAL DRAWING SIZE 841 x 594 - A1	
DRAWING No :	1413-(Reema)-7551	REV.	

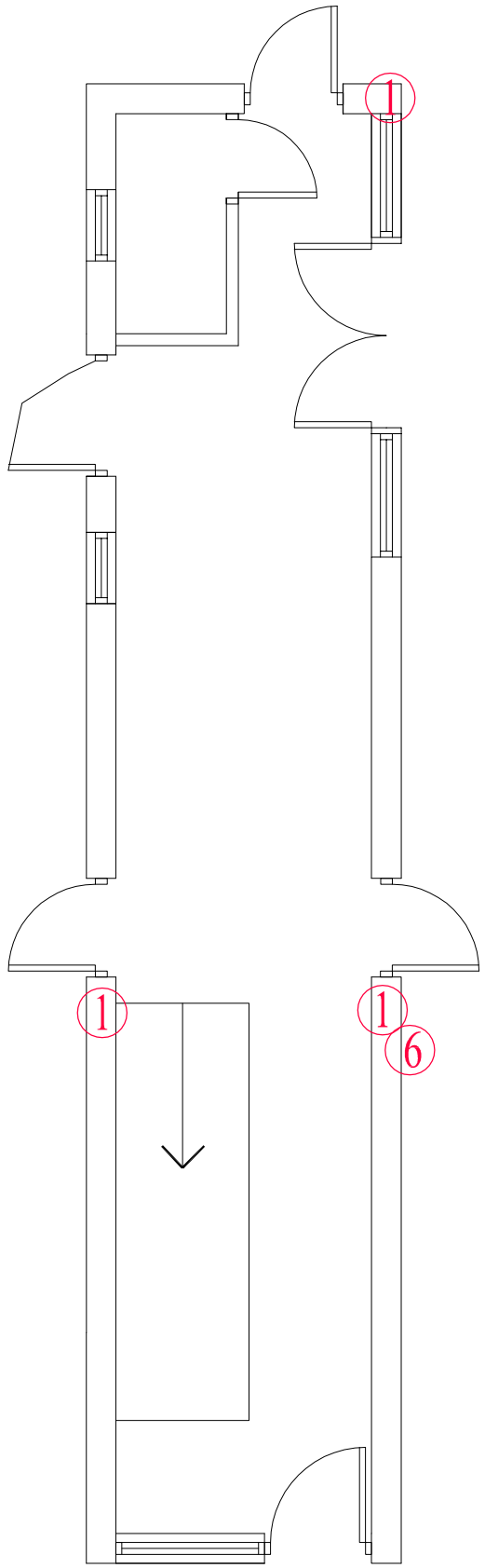

COMMUNAL STAIRCASE GROUND FLOOR PLAN
(Scale 1:30)

10 30 50
20 40

Do not scale from this drawing.
All dimensions must be checked on site by the Contractor prior to the commencement of any fabrication or building works.
Where applicable, dimensions and details are to be read in conjunction with specialist consultants' drawings and/or other specifications; any disparity is to be brought to the attention of Michael Dyson Associates Limited prior to the commencement of any fabrication or building works.
©This drawing is the property and copyright of Michael Dyson Associates Limited; It shall not be copied to any other party without the express written consent of an authorised director of Michael Dyson Associates Limited.

NOTES

REV	DATE	AMENDMENTS	BY	APR'D

West House, Meltham Road, Honley,
Huddersfield HD9 6LB
t. 01484 666888 f. 01484 664186
w. www.mdyson.co.uk

CLIENT :

RPS PLANNING AND DEVELOPMENT

PROJECT :

STRUCTURAL SURVEYS TO 4NR FLATS BLOCKS IN MILTON KEYNES

TITLE :

COMMUNAL STAIRS GROUND FLOOR PLANS, FIFE HOUSE

DRAWN BY :	NG	APPROVED BY :	
DATE :	28-08-2013	DATE :	
SCALE :	1:30	ORIGINAL DRAWING SIZE 841 x 594 - A1	
DRAWING No :	1210-(REEMA)-7551	REV.	

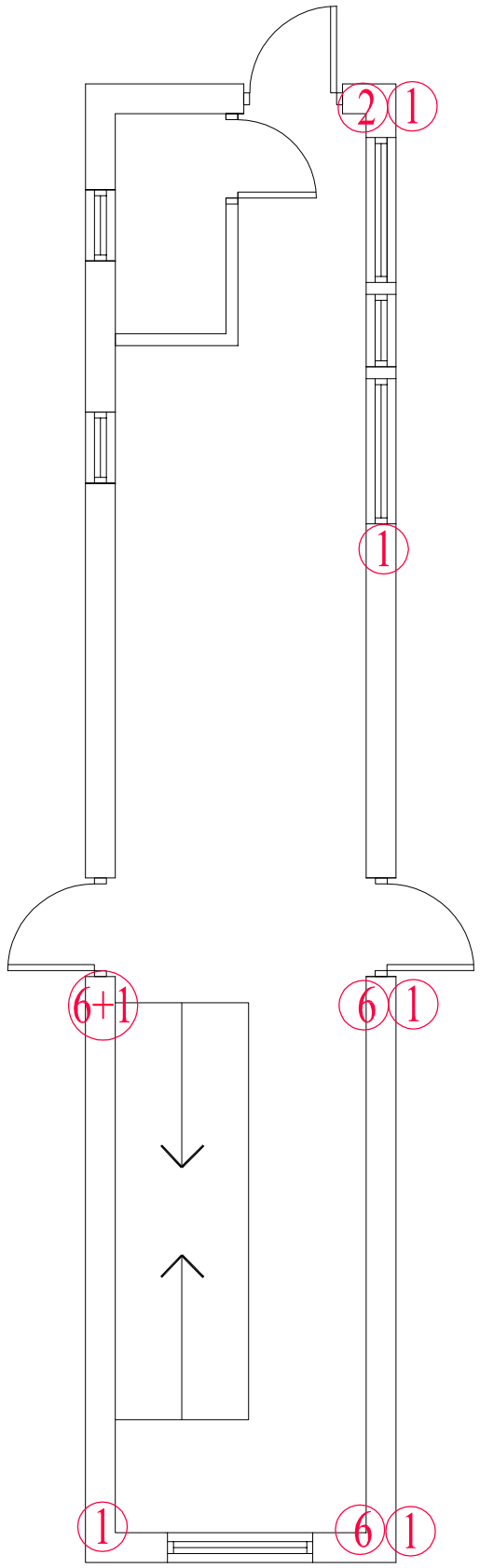

COMMUNAL STAIRCASE FIRST FLOOR PLANS
(Scale 1:30)

10 30 50
20 40

Do not scale from this drawing.
All dimensions must be checked on site by the Contractor prior to the commencement of any fabrication or building works.
Where applicable, dimensions and details are to be read in conjunction with specialist consultants' drawings and/or other specifications; any disparity is to be brought to the attention of Michael Dyson Associates Limited prior to the commencement of any fabrication or building works.
©This drawing is the property and copyright of Michael Dyson Associates Limited; It shall not be copied to any other party without the express written consent of an authorised director of Michael Dyson Associates Limited.

NOTES

REV	DATE	AMENDMENTS	BY	APR'D

West House, Meltham Road, Honley,
Huddersfield HD9 6LB
t. 01484 666888 f. 01484 664186
w. www.mdyson.co.uk

CLIENT :
RPS PLANNING & DEVELOPMENT

PROJECT :
STRUCTURAL SURVEYS TO 4NR REEMA FLATS BLOCKS IN MILTON KEYNES

TITLE :
COMMUNAL STAIRCASE FIRST FLOOR PLAN
FIFE HOUSE

DRAWN BY :	NG	APPROVED BY :	
DATE :	28-08-2013	DATE :	
SCALE :	1:30	ORIGINAL DRAWING SIZE 841 x 594 - A1	
DRAWING No :	1211-(REEMA)-7551	REV.	

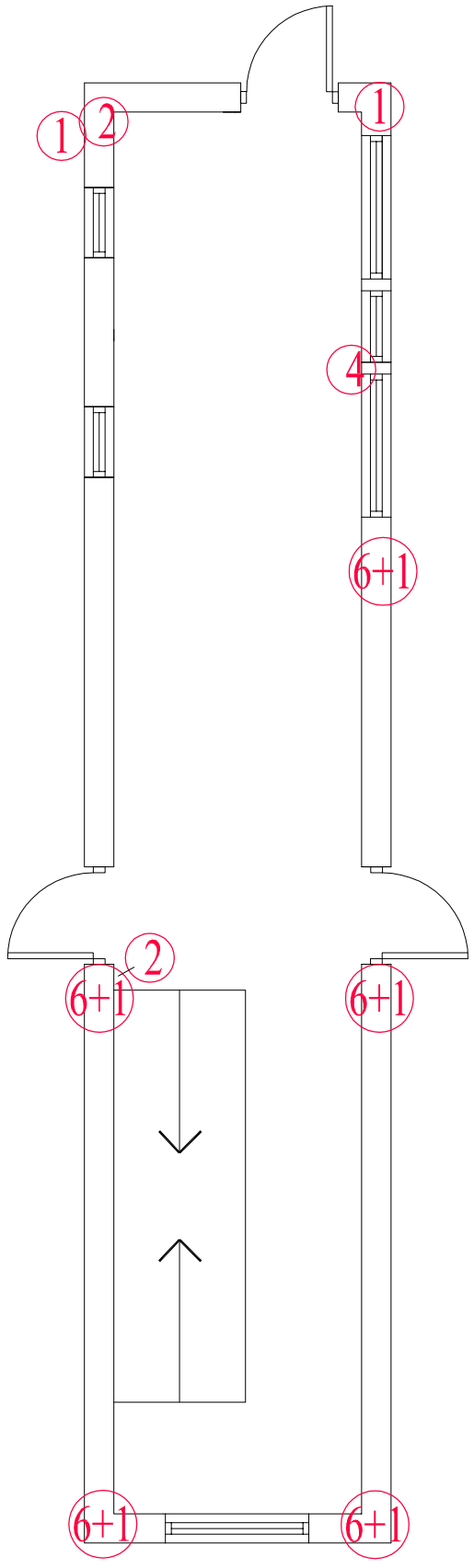

COMMUNAL STAIRCASE SECOND FLOOR PLANS
(Scale 1:30)

10 30 50
20 40

Do not scale from this drawing.
All dimensions must be checked on site by the Contractor prior to the commencement of any fabrication or building works.
Where applicable, dimensions and details are to be read in conjunction with specialist consultants' drawings and/or other specifications; any disparity is to be brought to the attention of Michael Dyson Associates Limited prior to the commencement of any fabrication or building works.
©This drawing is the property and copyright of Michael Dyson Associates Limited; It shall not be copied to any other party without the express written consent of an authorised director of Michael Dyson Associates Limited.

NOTES

REV	DATE	AMENDMENTS	BY	APR'D

West House, Meltham Road, Honley,
Huddersfield HD9 6LB
t. 01484 666888 f. 01484 664186
w. www.mdyson.co.uk

CLIENT :
R5PS PLANNING & DEVELOPMENT

PROJECT :
STRUCTURAL SURVEY OF 4NR REEMA FLATS BLOCKS IN MILTON KEYNES

TITLE :
COMMUNAL STAIRCASE SECOND FLOOR PLAN
FIFE HOUSE

DRAWN BY :	NG	APPROVED BY :	
DATE :	28-08-2013	DATE :	
SCALE :	1:30	ORIGINAL DRAWING SIZE 841 x 594 - A1	
DRAWING No :	1212-(REEMA)-7551	REV.	

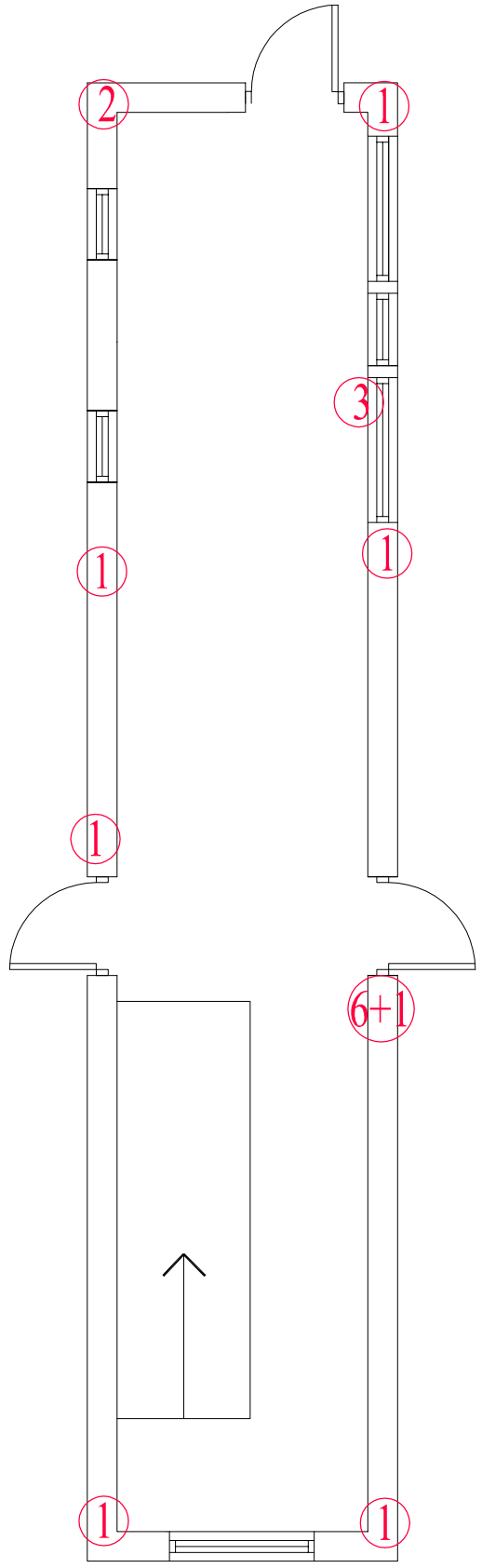

COMMUNAL STAIRCASE THIRD FLOOR PLAN
(Scale 1:30)

10 30 50
20 40

Do not scale from this drawing.
All dimensions must be checked on site by the Contractor prior to the commencement of any fabrication or building works.
Where applicable, dimensions and details are to be read in conjunction with specialist consultants' drawings and/or other specifications; any disparity is to be brought to the attention of Michael Dyson Associates Limited prior to the commencement of any fabrication or building works.
©This drawing is the property and copyright of Michael Dyson Associates Limited; It shall not be copied to any other party without the express written consent of an authorised director of Michael Dyson Associates Limited.

NOTES

REV	DATE	AMENDMENTS	BY	APR'D

West House, Meltham Road, Honley,
Huddersfield HD9 6LB
t. 01484 666888 f. 01484 664186
w. www.mdyson.co.uk

CLIENT :
RPS PLANNING & DEVELOPMENT

PROJECT :
STRUCTURAL SURVEY TO 4NR REEMA FLATS BLOCKS IN MILTON KEYNES

TITLE :
COMMUNAL STAIRCASE THIRD FLOOR PLAN
FIFE HOUSE

DRAWN BY :	NG	APPROVED BY :	
DATE :	28-08-2013	DATE :	
SCALE :	1:30	ORIGINAL DRAWING SIZE 841 x 594 - A1	
DRAWING No :	1213-(Reema)-7551	REV.	

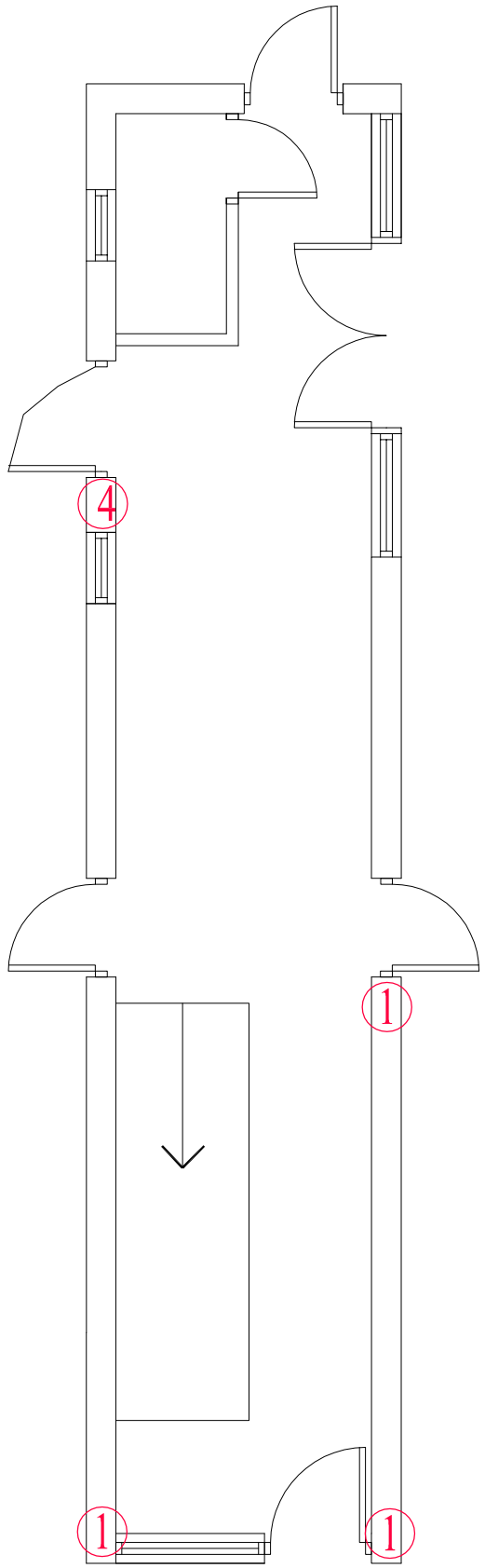

COMMUNAL STAIRCASE GROUND FLOOR PLAN
(Scale 1:30)

10 30 50
20 40

Do not scale from this drawing.
All dimensions must be checked on site by the Contractor prior to the commencement of any fabrication or building works.
Where applicable, dimensions and details are to be read in conjunction with specialist consultants' drawings and/or other specifications; any disparity is to be brought to the attention of Michael Dyson Associates Limited prior to the commencement of any fabrication or building works.
©This drawing is the property and copyright of Michael Dyson Associates Limited; It shall not be copied to any other party without the express written consent of an authorised director of Michael Dyson Associates Limited.

NOTES

REV	DATE	AMENDMENTS	BY	APR'D

West House, Meltham Road, Honley,
Huddersfield HD9 6LB
t. 01484 666888 f. 01484 664186
w. www.mdyson.co.uk

CLIENT :

RPS PLANNING AND DEVELOPMENT

PROJECT :

STRUCTURAL SURVEYS TO 4NR FLATS BLOCKS IN MILTON KEYNES

TITLE :

COMMUNAL STAIRS GROUND FLOOR PLANS, LANARK HOUSE

DRAWN BY :	NG	APPROVED BY :	
DATE :	28-08-2013	DATE :	
SCALE :	1:30	ORIGINAL DRAWING SIZE 841 x 594 - A1	
DRAWING No :	1010-(REEMA)-7551	REV.	

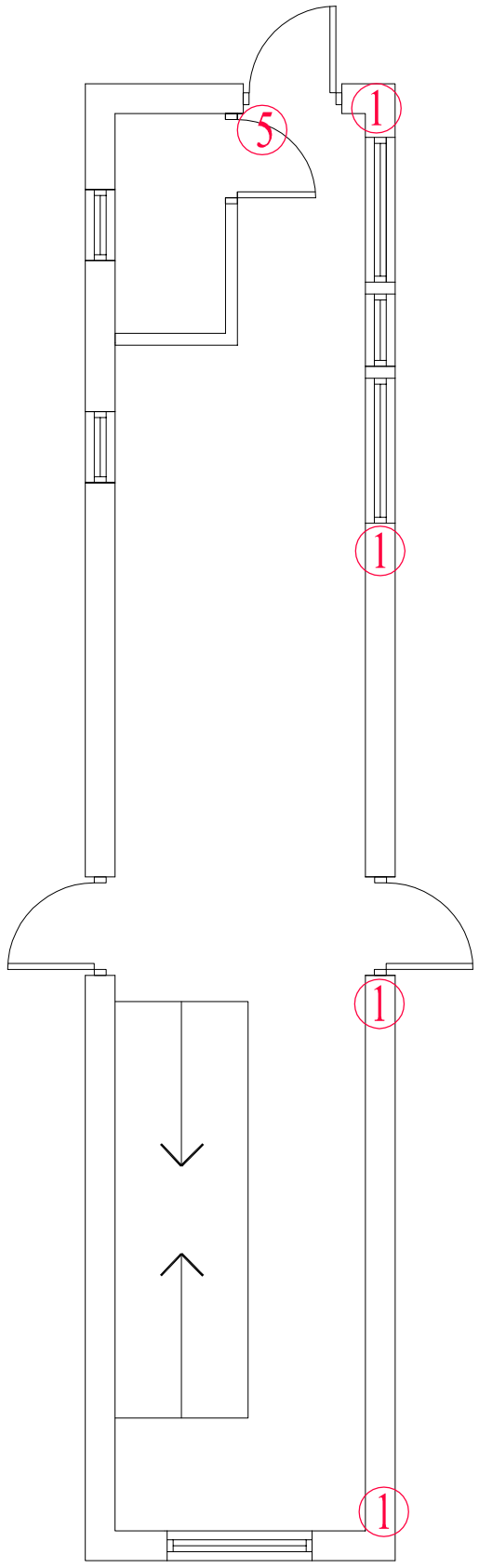

COMMUNAL STAIRCASE FIRST FLOOR PLANS
(Scale 1:30)

10 30 50
20 40

Do not scale from this drawing.
All dimensions must be checked on site by the Contractor prior to the commencement of any fabrication or building works.
Where applicable, dimensions and details are to be read in conjunction with specialist consultants' drawings and/or other specifications; any disparity is to be brought to the attention of Michael Dyson Associates Limited prior to the commencement of any fabrication or building works.
©This drawing is the property and copyright of Michael Dyson Associates Limited; It shall not be copied to any other party without the express written consent of an authorised director of Michael Dyson Associates Limited.

NOTES

REV	DATE	AMENDMENTS	BY	APR'D

West House, Meltham Road, Honley,
Huddersfield HD9 6LB
t. 01484 666888 f. 01484 664186
w. www.mdyson.co.uk

CLIENT :
RPS PLANNING & DEVELOPMENT

PROJECT :
STRUCTURAL SURVEYS TO 4NR REEMA FLATS BLOCKS IN MILTON KEYNES

TITLE :
COMMUNAL STAIRCASE FIRST FLOOR PLAN
LANARK HOUSE

DRAWN BY :	NG	APPROVED BY :	
DATE :	28-08-2013	DATE :	
SCALE :	1:30	ORIGINAL DRAWING SIZE 841 x 594 - A1	
DRAWING No :	1011-(REEMA)-7551	REV.	

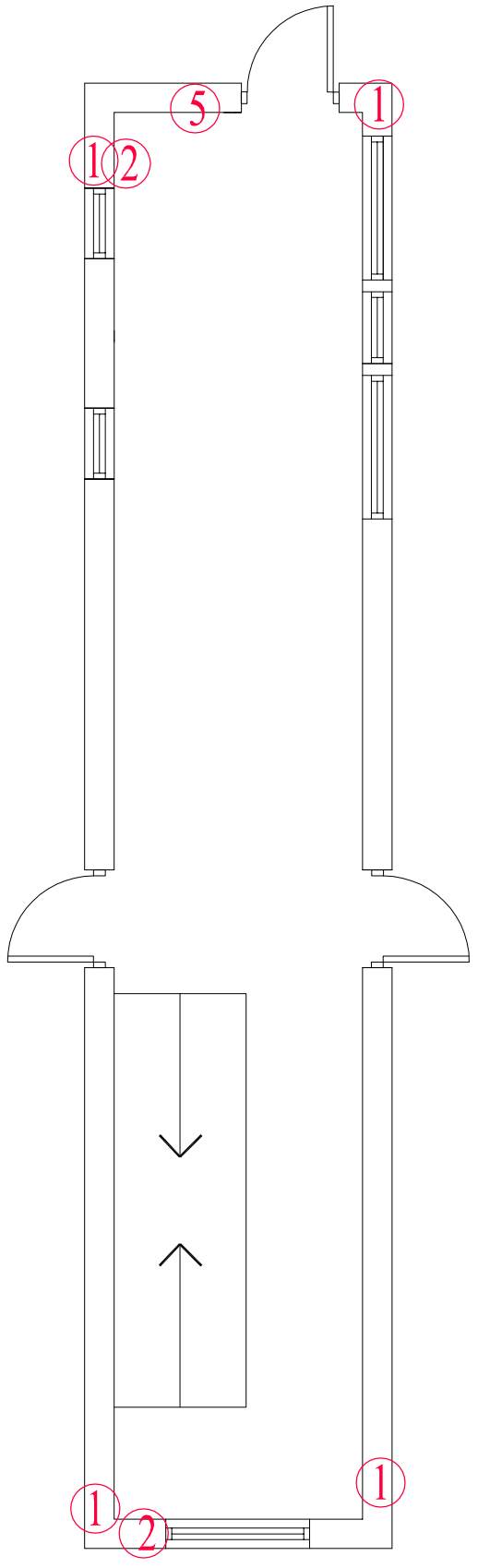

COMMUNAL STAIRCASE SECOND FLOOR PLANS
(Scale 1:30)

10 30 50
20 40

Do not scale from this drawing.
All dimensions must be checked on site by the Contractor prior to the commencement of any fabrication or building works.
Where applicable, dimensions and details are to be read in conjunction with specialist consultants' drawings and/or other specifications; any disparity is to be brought to the attention of Michael Dyson Associates Limited prior to the commencement of any fabrication or building works.
©This drawing is the property and copyright of Michael Dyson Associates Limited; It shall not be copied to any other party without the express written consent of an authorised director of Michael Dyson Associates Limited.

NOTES

REV	DATE	AMENDMENTS	BY	APR'D

West House, Meltham Road, Honley,
Huddersfield HD9 6LB
t. 01484 666888 f. 01484 664186
w. www.mdyson.co.uk

CLIENT :
R5PS PLANNING & DEVELOPMENT

PROJECT :
STRUCTURAL SURVEY OF 4NR REEMA FLATS BLOCKS IN MILTON KEYNES

TITLE :
COMMUNAL STAIRCASE SECOND FLOOR PLAN
LANARK HOUSE

DRAWN BY :	NG	APPROVED BY :	
DATE :	28-08-2013	DATE :	
SCALE :	1:30	ORIGINAL DRAWING SIZE 841 x 594 - A1	
DRAWING No :	1012-(REEMA)-7551	REV.	

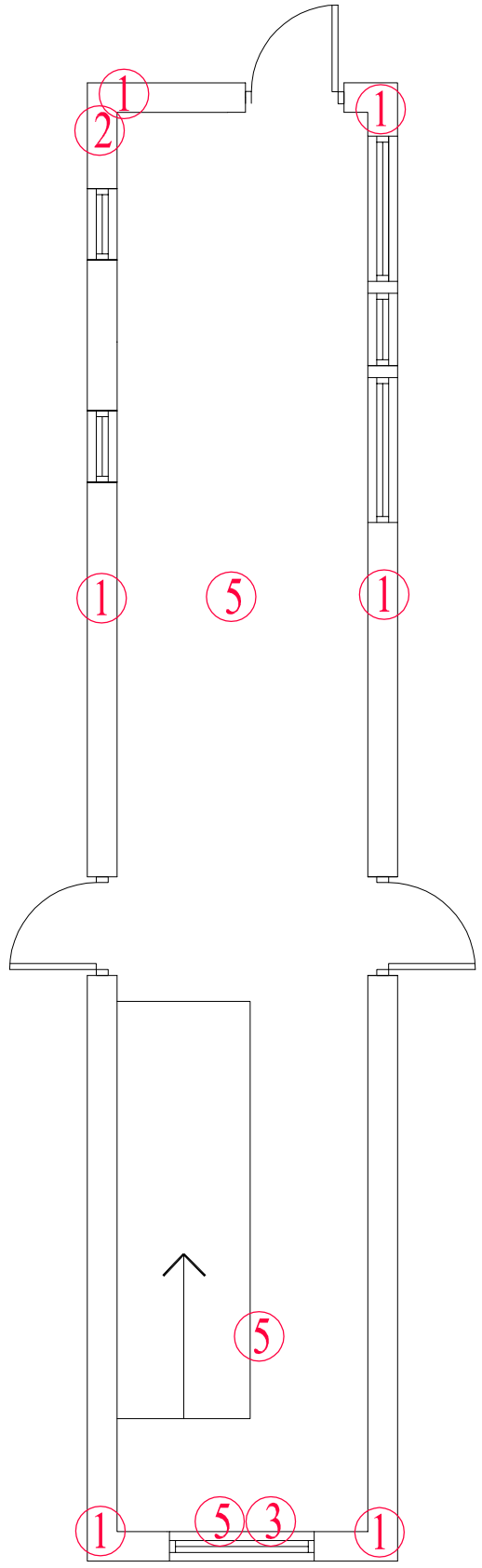

COMMUNAL STAIRCASE THIRD FLOOR PLAN
(Scale 1:30)

10 30 50
20 40

Do not scale from this drawing.
All dimensions must be checked on site by the Contractor prior to the commencement of any fabrication or building works.
Where applicable, dimensions and details are to be read in conjunction with specialist consultants' drawings and/or other specifications; any disparity is to be brought to the attention of Michael Dyson Associates Limited prior to the commencement of any fabrication or building works.
©This drawing is the property and copyright of Michael Dyson Associates Limited; It shall not be copied to any other party without the express written consent of an authorised director of Michael Dyson Associates Limited.

NOTES

REV	DATE	AMENDMENTS	BY	APR'D

West House, Meltham Road, Honley,
Huddersfield HD9 6LB
t. 01484 666888 f. 01484 664186
w. www.mdyson.co.uk

CLIENT :
RPS PLANNING & DEVELOPMENT

PROJECT :
STRUCTURAL SURVEY TO 4NR REEMA FLATS BLOCKS IN MILTON KEYNES

TITLE :
COMMUNAL STAIRCASE THIRD FLOOR PLAN
LANARK HOUSE

DRAWN BY :	NG	APPROVED BY :	
DATE :	28-08-2013	DATE :	
SCALE :	1:30	ORIGINAL DRAWING SIZE 841 x 594 - A1	
DRAWING No :	1013-(Reema)-7551	REV.	

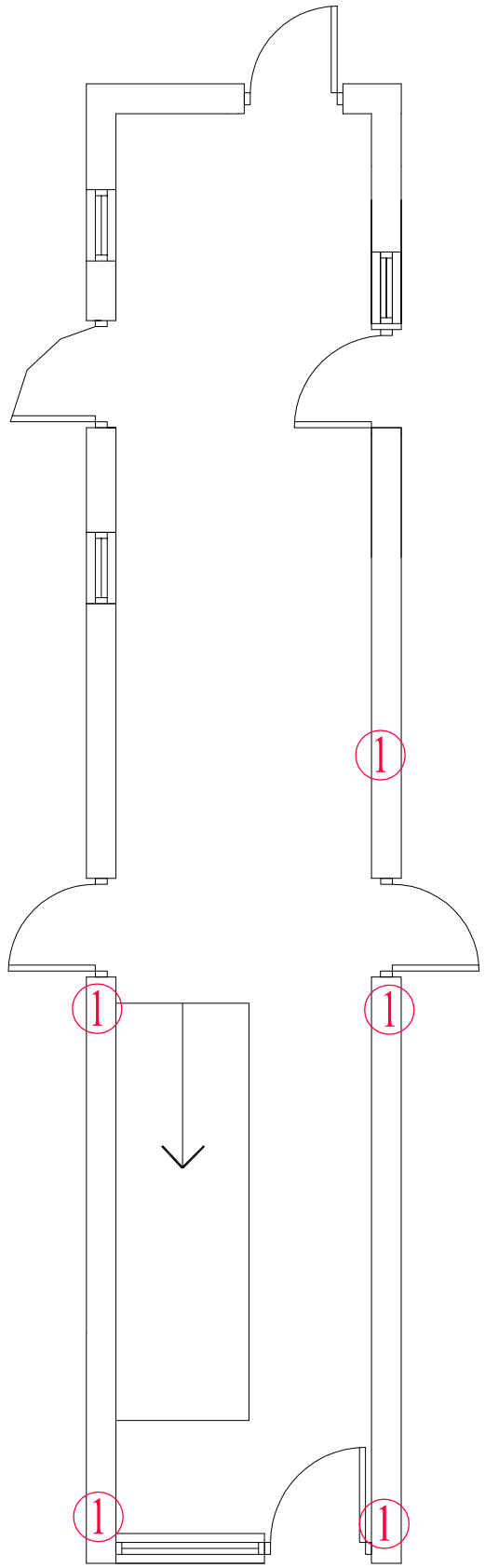

COMMUNAL STAIRCASE GROUND FLOOR PLAN
(Scale 1:30)

10 30 50
20 40

Do not scale from this drawing.
All dimensions must be checked on site by the Contractor prior to the commencement of any fabrication or building works.
Where applicable, dimensions and details are to be read in conjunction with specialist consultants' drawings and/or other specifications; any disparity is to be brought to the attention of Michael Dyson Associates Limited prior to the commencement of any fabrication or building works.
©This drawing is the property and copyright of Michael Dyson Associates Limited; It shall not be copied to any other party without the express written consent of an authorised director of Michael Dyson Associates Limited.

NOTES

REV	DATE	AMENDMENTS	BY	APR'D

West House, Meltham Road, Honley,
Huddersfield HD9 6LB
t. 01484 666888 f. 01484 664186
w. www.mdyson.co.uk

CLIENT :

RPS PLANNING AND DEVELOPMENT

PROJECT :

STRUCTURAL SURVEYS TO 4NR FLATS BLOCKS IN MILTON KEYNES

TITLE :

COMMUNAL STAIRS GROUND FLOOR PLANS, LEWES HOUSE

DRAWN BY :	NG	APPROVED BY :	
DATE :	28-08-2013	DATE :	
SCALE :	1:30	ORIGINAL DRAWING SIZE 841 x 594 - A1	
DRAWING No :	1310-(REEMA)-7551	REV.	

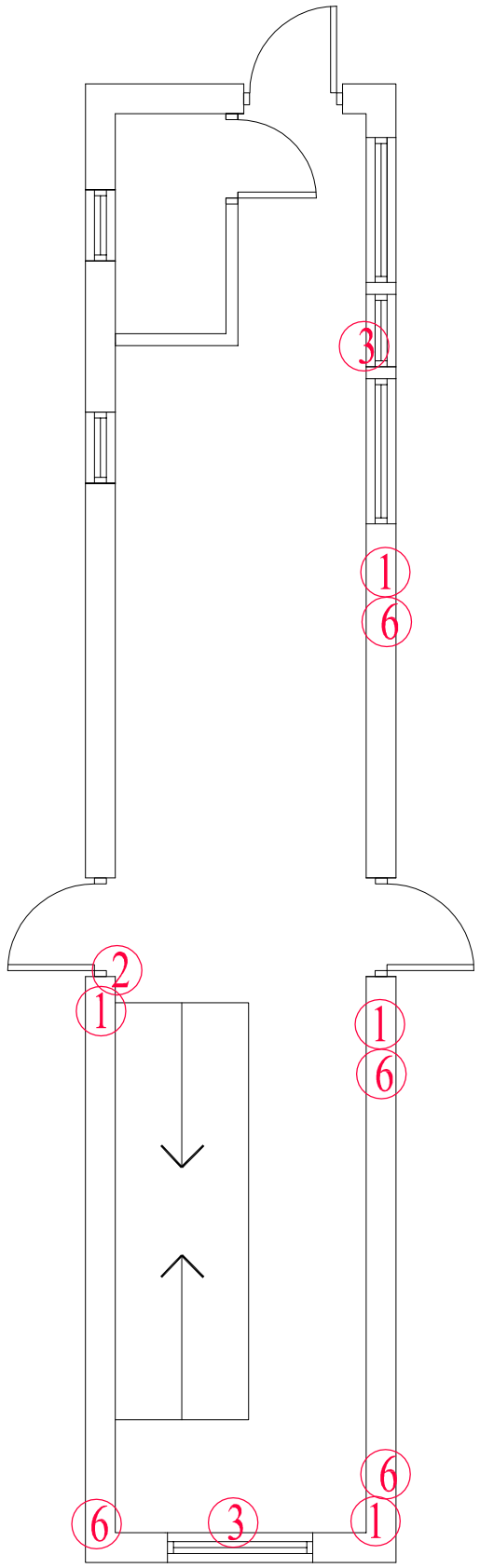

COMMUNAL STAIRCASE FIRST FLOOR PLANS
(Scale 1:30)

10 30 50
20 40

Do not scale from this drawing.
All dimensions must be checked on site by the Contractor prior to the commencement of any fabrication or building works.
Where applicable, dimensions and details are to be read in conjunction with specialist consultants' drawings and/or other specifications; any disparity is to be brought to the attention of Michael Dyson Associates Limited prior to the commencement of any fabrication or building works.
©This drawing is the property and copyright of Michael Dyson Associates Limited; It shall not be copied to any other party without the express written consent of an authorised director of Michael Dyson Associates Limited.

NOTES

REV	DATE	AMENDMENTS	BY	APR'D

West House, Meltham Road, Honley,
Huddersfield HD9 6LB
t. 01484 666888 f. 01484 664186
w. www.mdyson.co.uk

CLIENT :
RPS PLANNING & DEVELOPMENT

PROJECT :
STRUCTURAL SURVEYS TO 4NR REEMA FLATS BLOCKS IN MILTON KEYNES

TITLE :
COMMUNAL STAIRCASE FIRST FLOOR PLAN
LEWES HOUSE

DRAWN BY :	NG	APPROVED BY :	
DATE :	28-08-2013	DATE :	
SCALE :	1:30	ORIGINAL DRAWING SIZE 841 x 594 - A1	
DRAWING No :	1311-(REEMA)-7551	REV.	

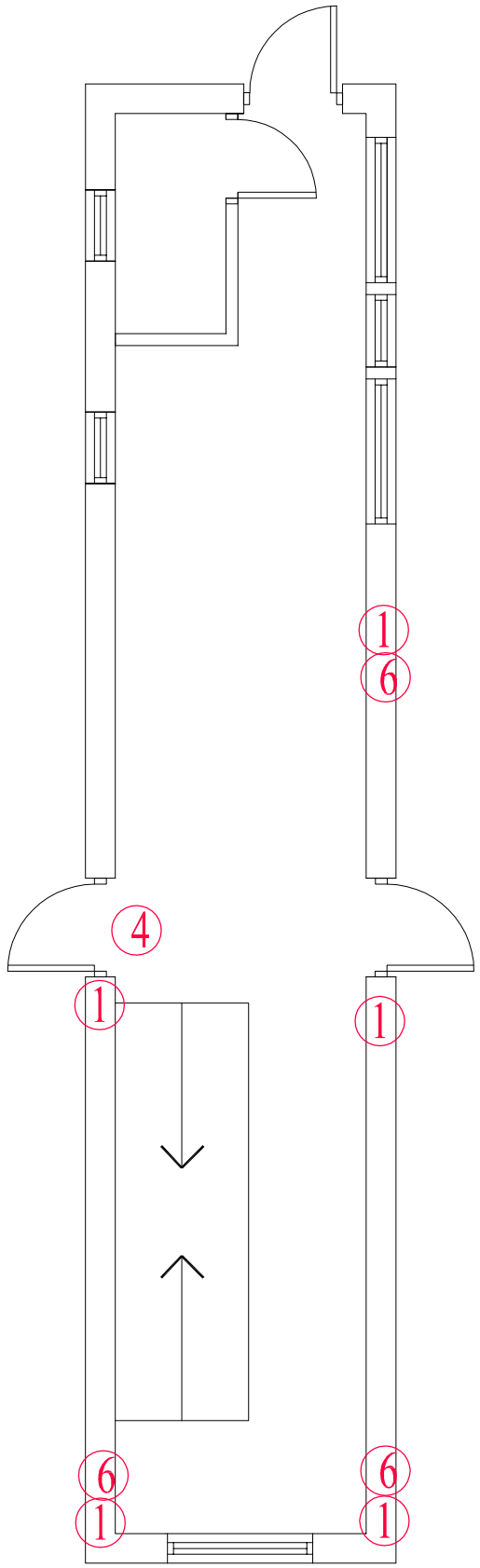

COMMUNAL STAIRCASE SECOND FLOOR PLANS
(Scale 1:30)

10 30 50
20 40

Do not scale from this drawing.
All dimensions must be checked on site by the Contractor prior to the commencement of any fabrication or building works.
Where applicable, dimensions and details are to be read in conjunction with specialist consultants' drawings and/or other specifications; any disparity is to be brought to the attention of Michael Dyson Associates Limited prior to the commencement of any fabrication or building works.
©This drawing is the property and copyright of Michael Dyson Associates Limited; It shall not be copied to any other party without the express written consent of an authorised director of Michael Dyson Associates Limited.

NOTES

REV	DATE	AMENDMENTS	BY	APR'D

West House, Meltham Road, Honley,
Huddersfield HD9 6LB
t. 01484 666888 f. 01484 664186
w. www.mdyson.co.uk

CLIENT :
R5PS PLANNING & DEVELOPMENT

PROJECT :
STRUCTURAL SURVEY OF 4NR REEMA FLATS BLOCKS IN MILTON KEYNES

TITLE :
COMMUNAL STAIRCASE SECOND FLOOR PLAN LEWES HOUSE

DRAWN BY :	NG	APPROVED BY :	
DATE :	28-08-2013	DATE :	
SCALE :	1:30	ORIGINAL DRAWING SIZE 841 x 594 - A1	
DRAWING No :	1312-(REEMA)-7551	REV.	

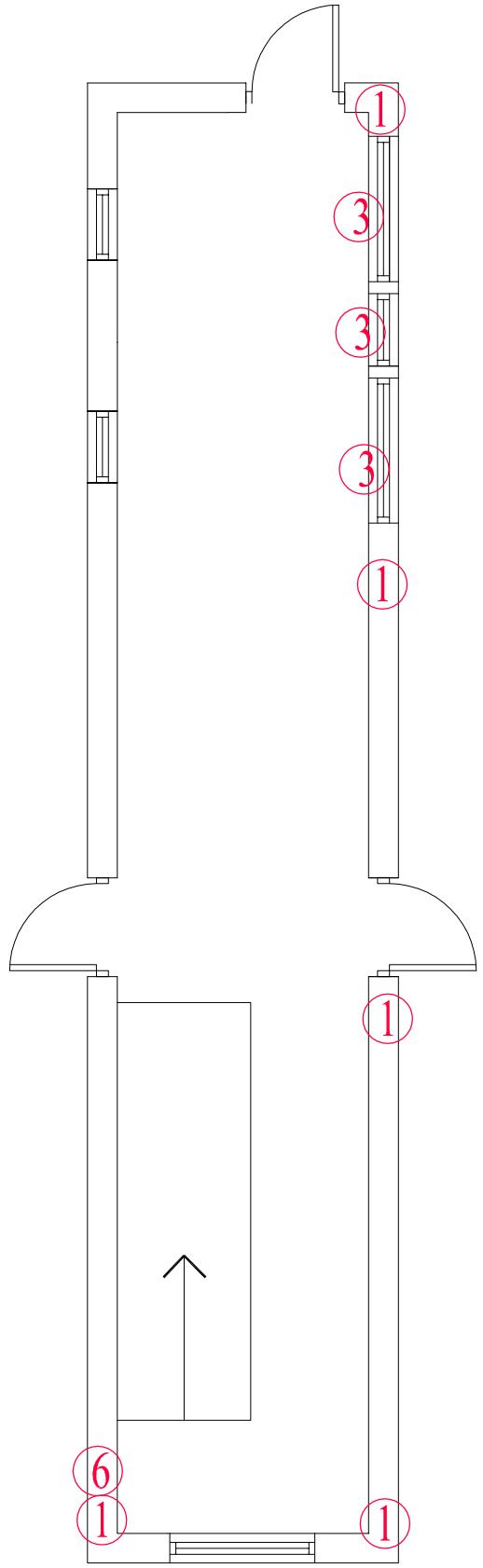

COMMUNAL STAIRCASE THIRD FLOOR PLAN
(Scale 1:30)

10 30 50
20 40

Do not scale from this drawing.
All dimensions must be checked on site by the Contractor prior to the commencement of any fabrication or building works.
Where applicable, dimensions and details are to be read in conjunction with specialist consultants' drawings and/or other specifications; any disparity is to be brought to the attention of Michael Dyson Associates Limited prior to the commencement of any fabrication or building works.
©This drawing is the property and copyright of Michael Dyson Associates Limited; It shall not be copied to any other party without the express written consent of an authorised director of Michael Dyson Associates Limited.

NOTES

REV	DATE	AMENDMENTS	BY	APR'D

West House, Meltham Road, Honley,
Huddersfield HD9 6LB
t. 01484 666888 f. 01484 664186
w. www.mdyson.co.uk

CLIENT :
RPS PLANNING & DEVELOPMENT

PROJECT :
STRUCTURAL SURVEY TO 4NR REEMA FLATS BLOCKS IN MILTON KEYNES

TITLE :
COMMUNAL STAIRCASE THIRD FLOOR PLAN
LEWES HOUSE

DRAWN BY :	NG	APPROVED BY :	
DATE :	28-08-2013	DATE :	
SCALE :	1:30	ORIGINAL DRAWING SIZE 841 x 594 - A1	
DRAWING No :	1313-(Reema)-7551	REV.	

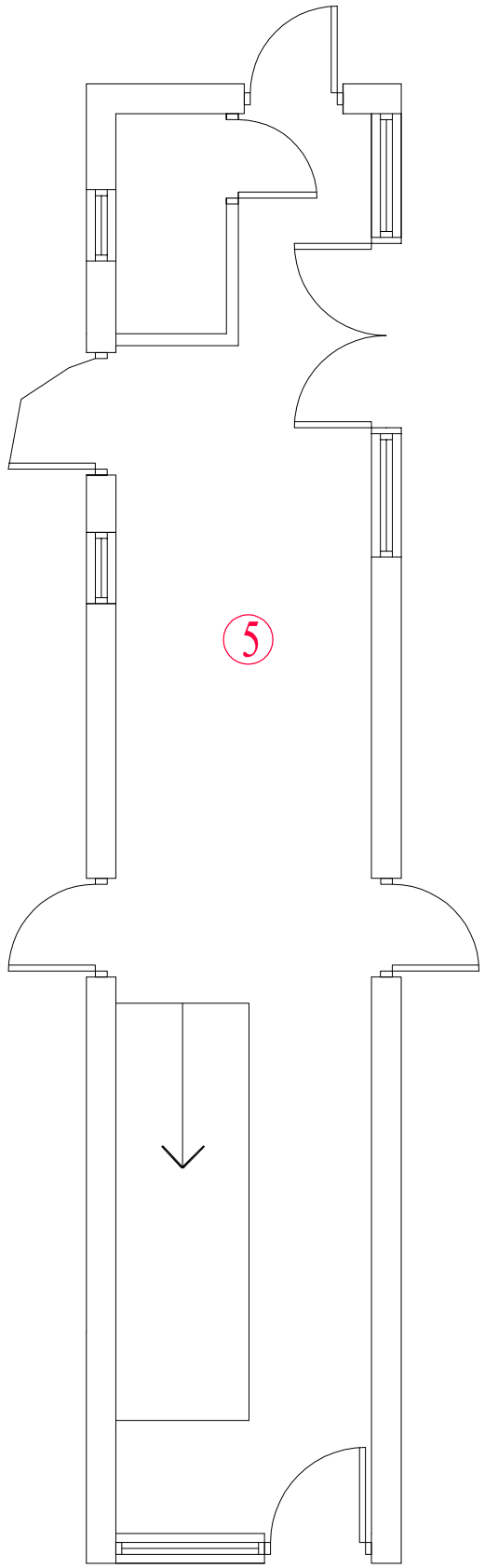

COMMUNAL STAIRCASE GROUND FLOOR PLAN
(Scale 1:30)

10 30 50
20 40

Do not scale from this drawing.
All dimensions must be checked on site by the Contractor prior to the commencement of any fabrication or building works.
Where applicable, dimensions and details are to be read in conjunction with specialist consultants' drawings and/or other specifications; any disparity is to be brought to the attention of Michael Dyson Associates Limited prior to the commencement of any fabrication or building works.
©This drawing is the property and copyright of Michael Dyson Associates Limited; It shall not be copied to any other party without the express written consent of an authorised director of Michael Dyson Associates Limited.

NOTES

REV	DATE	AMENDMENTS	BY	APR'D

West House, Meltham Road, Honley,
Huddersfield HD9 6LB
t. 01484 666888 f. 01484 664186
w. www.mdyson.co.uk

CLIENT :

RPS PLANNING AND DEVELOPMENT

PROJECT :

STRUCTURAL SURVEYS TO 4NR FLATS BLOCKS IN MILTON KEYNES

TITLE :

COMMUNAL STAIRS GROUND FLOOR PLANS, PEMBROKE HOUSE

DRAWN BY :	NG	APPROVED BY :	
DATE :	28-08-2013	DATE :	
SCALE :	1:30	ORIGINAL DRAWING SIZE 841 x 594 - A1	
DRAWING No :	910-(REEMA)-7551	REV.	

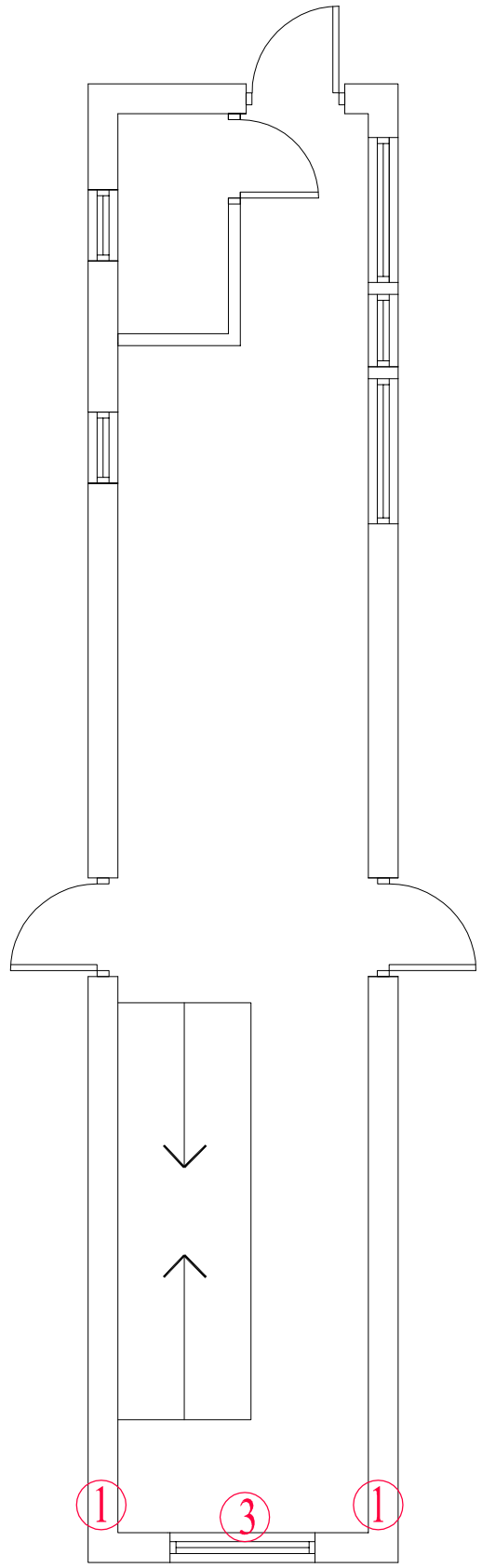

COMMUNAL STAIRCASE FIRST FLOOR PLANS
(Scale 1:30)

10 30 50
20 40

Do not scale from this drawing.
All dimensions must be checked on site by the Contractor prior to the commencement of any fabrication or building works.
Where applicable, dimensions and details are to be read in conjunction with specialist consultants' drawings and/or other specifications; any disparity is to be brought to the attention of Michael Dyson Associates Limited prior to the commencement of any fabrication or building works.
©This drawing is the property and copyright of Michael Dyson Associates Limited; It shall not be copied to any other party without the express written consent of an authorised director of Michael Dyson Associates Limited.

NOTES

REV	DATE	AMENDMENTS	BY	APR'D

West House, Meltham Road, Honley,
Huddersfield HD9 6LB
t. 01484 666888 f. 01484 664186
w. www.mdyson.co.uk

CLIENT :
RPS PLANNING & DEVELOPMENT

PROJECT :
STRUCTURAL SURVEYS TO 4NR REEMA FLATS BLOCKS IN MILTON KEYNES

TITLE :
COMMUNAL STAIRCASE FIRST FLOOR PLAN PEMBROKE HOUSE

DRAWN BY :	NG	APPROVED BY :	
DATE :	28-08-2013	DATE :	
SCALE :	1:30	ORIGINAL DRAWING SIZE 841 x 594 - A1	
DRAWING No :	911-(REEMA)-7551	REV.	

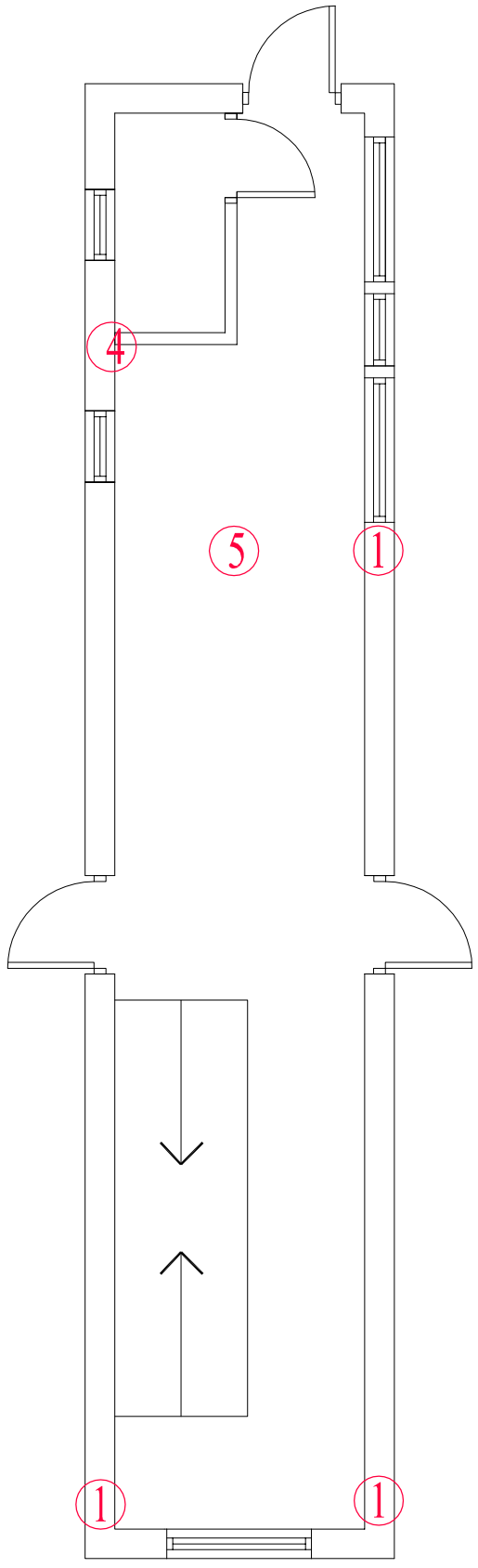

COMMUNAL STAIRCASE SECOND FLOOR PLANS
(Scale 1:30)

10 30 50
20 40

Do not scale from this drawing.
All dimensions must be checked on site by the Contractor prior to the commencement of any fabrication or building works.
Where applicable, dimensions and details are to be read in conjunction with specialist consultants' drawings and/or other specifications; any disparity is to be brought to the attention of Michael Dyson Associates Limited prior to the commencement of any fabrication or building works.
©This drawing is the property and copyright of Michael Dyson Associates Limited; It shall not be copied to any other party without the express written consent of an authorised director of Michael Dyson Associates Limited.

NOTES

REV	DATE	AMENDMENTS	BY	APR'D

West House, Meltham Road, Honley,
Huddersfield HD9 6LB
t. 01484 666888 f. 01484 664186
w. www.mdyson.co.uk

CLIENT :
R5PS PLANNING & DEVELOPMENT

PROJECT :
STRUCTURAL SURVEY OF 4NR REEMA FLATS BLOCKS IN MILTON KEYNES

TITLE :
COMMUNAL STAIRCASE SECOND FLOOR PLAN PEMBROKE HOUSE

DRAWN BY :	NG	APPROVED BY :	
DATE :	28-08-2013	DATE :	
SCALE :	1:30	ORIGINAL DRAWING SIZE 841 x 594 - A1	
DRAWING No :	912-(REEMA)-7551	REV.	

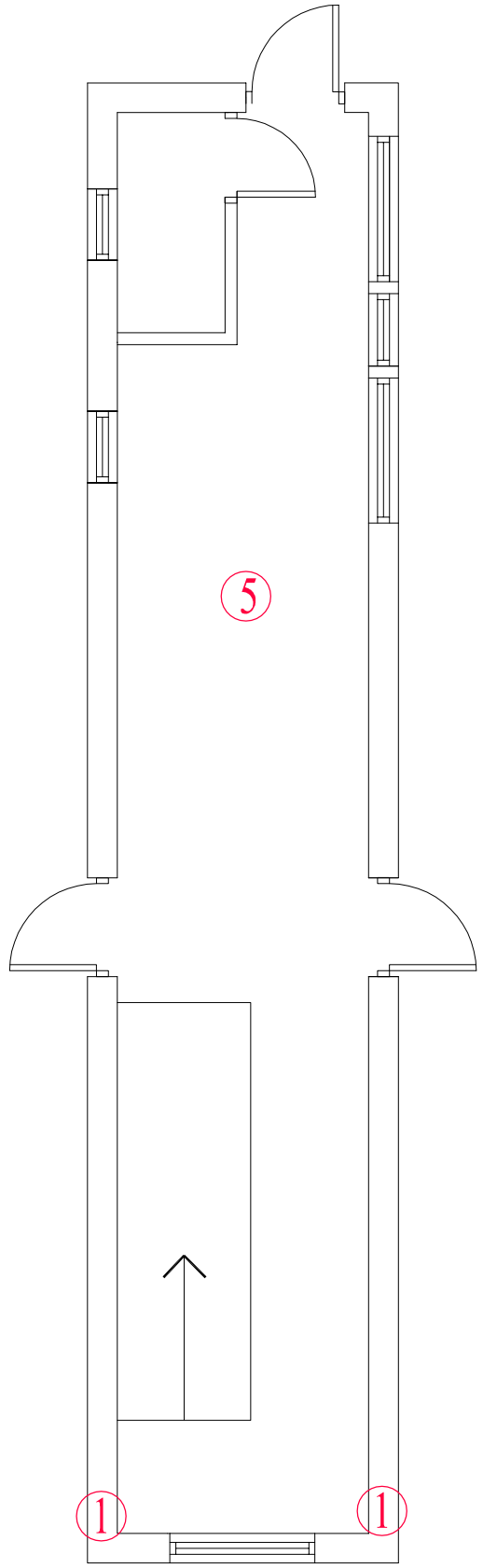

COMMUNAL STAIRCASE THIRD FLOOR PLAN
(Scale 1:30)

10 30 50
20 40

Do not scale from this drawing.
All dimensions must be checked on site by the Contractor prior to the commencement of any fabrication or building works.
Where applicable, dimensions and details are to be read in conjunction with specialist consultants' drawings and/or other specifications; any disparity is to be brought to the attention of Michael Dyson Associates Limited prior to the commencement of any fabrication or building works.
©This drawing is the property and copyright of Michael Dyson Associates Limited; It shall not be copied to any other party without the express written consent of an authorised director of Michael Dyson Associates Limited.

NOTES

REV	DATE	AMENDMENTS	BY	APR'D

West House, Meltham Road, Honley,
Huddersfield HD9 6LB
t. 01484 666888 f. 01484 664186
w. www.mdyson.co.uk

CLIENT :

RPS PLANNING & DEVELOPMENT

PROJECT :

STRUCTURAL SURVEY TO 4NR REEMA FLATS BLOCKS IN MILTON KEYNES

TITLE :

COMMUNAL STAIRCASE THIRD FLOOR PLAN
PEMBROKE HOUSE

DRAWN BY :	SM	APPROVED BY :	
DATE :	28-08-2013	DATE :	
SCALE :	1:30	ORIGINAL DRAWING SIZE 841 x 594 - A1	
DRAWING No :	913-(Reema)-7551	REV.	

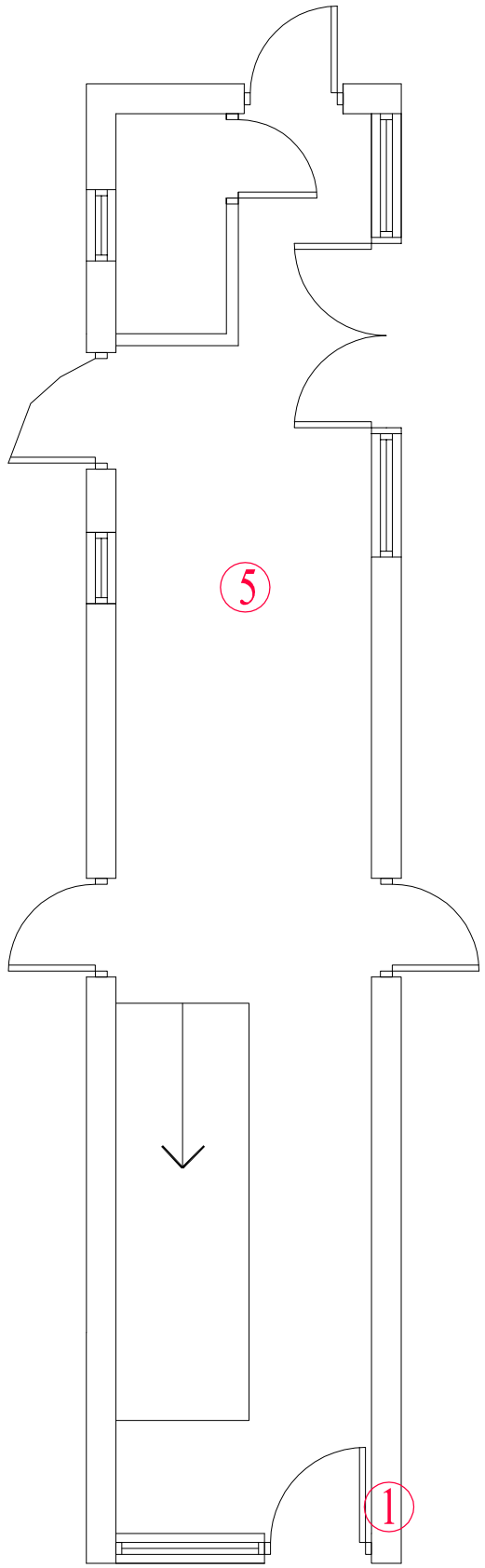

COMMUNAL STAIRCASE GROUND FLOOR PLAN
(Scale 1:30)

10 30 50
20 40

Do not scale from this drawing.
All dimensions must be checked on site by the Contractor prior to the commencement of any fabrication or building works.
Where applicable, dimensions and details are to be read in conjunction with specialist consultants' drawings and/or other specifications; any disparity is to be brought to the attention of Michael Dyson Associates Limited prior to the commencement of any fabrication or building works.
©This drawing is the property and copyright of Michael Dyson Associates Limited; It shall not be copied to any other party without the express written consent of an authorised director of Michael Dyson Associates Limited.

NOTES

REV	DATE	AMENDMENTS	BY	APR'D

West House, Meltham Road, Honley,
Huddersfield HD9 6LB
t. 01484 666888 f. 01484 664186
w. www.mdyson.co.uk

CLIENT :

RPS PLANNING AND DEVELOPMENT

PROJECT :

STRUCTURAL SURVEYS TO 4NR FLATS BLOCKS IN MILTON KEYNES

TITLE :

COMMUNAL STAIRS GROUND FLOOR PLANS, RUTLAND HOUSE

DRAWN BY :	NG	APPROVED BY :	
DATE :	28-08-2013	DATE :	
SCALE :	1:30	ORIGINAL DRAWING SIZE 841 x 594 - A1	
DRAWING No :	810-(REEMA)-7551	REV.	

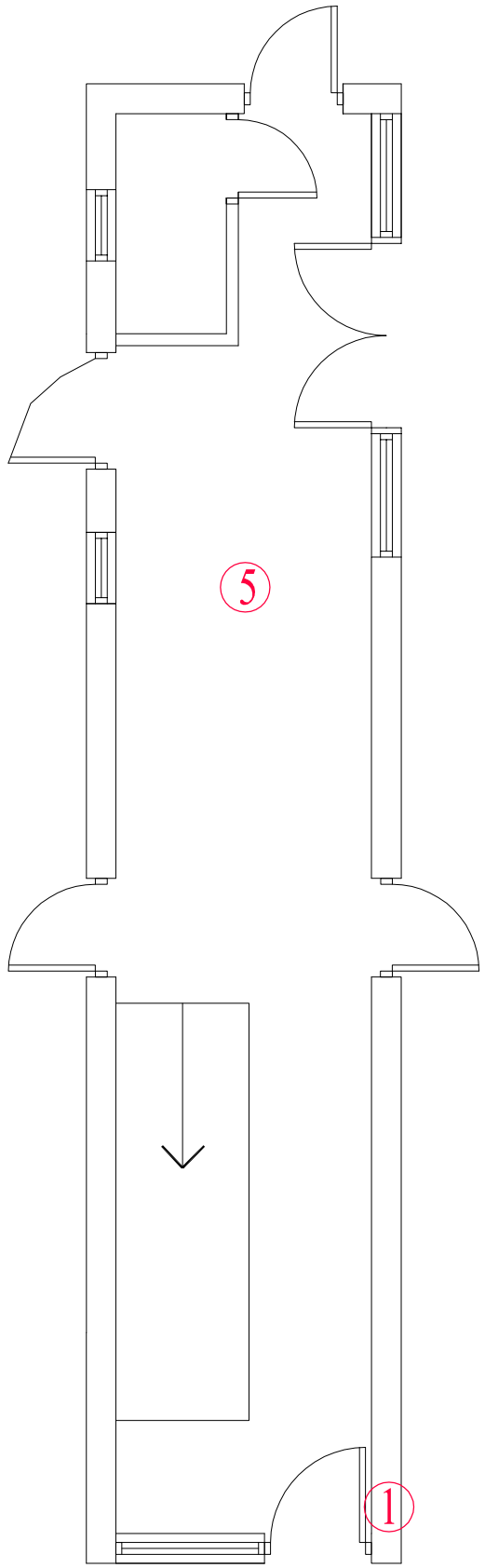

COMMUNAL STAIRCASE GROUND FLOOR PLAN
(Scale 1:30)

10 30 50
20 40

Do not scale from this drawing.
All dimensions must be checked on site by the Contractor prior to the commencement of any fabrication or building works.
Where applicable, dimensions and details are to be read in conjunction with specialist consultants' drawings and/or other specifications; any disparity is to be brought to the attention of Michael Dyson Associates Limited prior to the commencement of any fabrication or building works.
©This drawing is the property and copyright of Michael Dyson Associates Limited; It shall not be copied to any other party without the express written consent of an authorised director of Michael Dyson Associates Limited.

NOTES

REV	DATE	AMENDMENTS	BY	APR'D

West House, Meltham Road, Honley,
Huddersfield HD9 6LB
t. 01484 666888 f. 01484 664186
w. www.mdyson.co.uk

CLIENT :

RPS PLANNING AND DEVELOPMENT

PROJECT :

STRUCTURAL SURVEYS TO 4NR FLATS BLOCKS IN MILTON KEYNES

TITLE :

COMMUNAL STAIRS GROUND FLOOR PLANS, RUTLAND HOUSE

DRAWN BY :	NG	APPROVED BY :	
DATE :	28-08-2013	DATE :	
SCALE :	1:30	ORIGINAL DRAWING SIZE 841 x 594 - A1	
DRAWING No :	810-(REEMA)-7551	REV.	

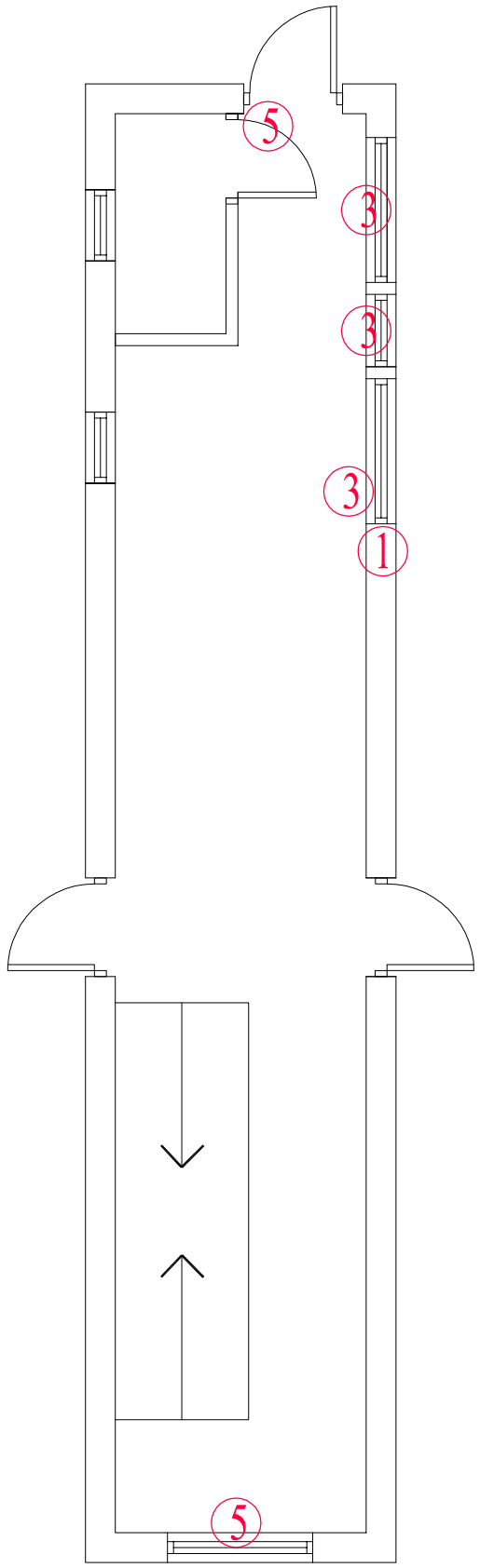

COMMUNAL STAIRCASE FIRST FLOOR PLANS
(Scale 1:30)

10 30 50
20 40

Do not scale from this drawing.
All dimensions must be checked on site by the Contractor prior to the commencement of any fabrication or building works.
Where applicable, dimensions and details are to be read in conjunction with specialist consultants' drawings and/or other specifications; any disparity is to be brought to the attention of Michael Dyson Associates Limited prior to the commencement of any fabrication or building works.
©This drawing is the property and copyright of Michael Dyson Associates Limited; It shall not be copied to any other party without the express written consent of an authorised director of Michael Dyson Associates Limited.

NOTES

REV	DATE	AMENDMENTS	BY	APR'D

West House, Meltham Road, Honley,
Huddersfield HD9 6LB
t. 01484 666888 f. 01484 664186
w. www.mdyson.co.uk

CLIENT :
RPS PLANNING & DEVELOPMENT

PROJECT :
STRUCTURAL SURVEYS TO 4NR REEMA FLATS BLOCKS IN MILTON KEYNES

TITLE :
COMMUNAL STAIRCASE FIRST FLOOR PLAN RUTLAND HOUSE

DRAWN BY :	NG	APPROVED BY :	
DATE :	28-08-2013	DATE :	
SCALE :	1:30	ORIGINAL DRAWING SIZE 841 x 594 - A1	
DRAWING No :	811-(REEMA)-7551	REV.	

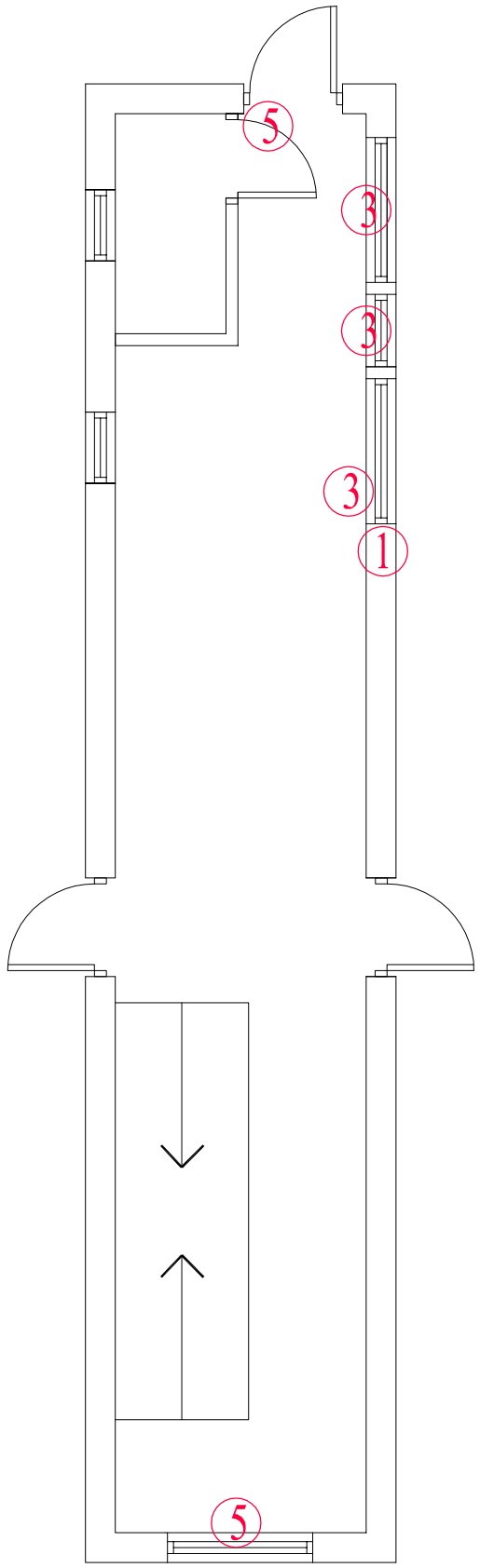

COMMUNAL STAIRCASE FIRST FLOOR PLANS
(Scale 1:30)

10 30 50
20 40

Do not scale from this drawing.
All dimensions must be checked on site by the Contractor prior to the commencement of any fabrication or building works.
Where applicable, dimensions and details are to be read in conjunction with specialist consultants' drawings and/or other specifications; any disparity is to be brought to the attention of Michael Dyson Associates Limited prior to the commencement of any fabrication or building works.
©This drawing is the property and copyright of Michael Dyson Associates Limited; It shall not be copied to any other party without the express written consent of an authorised director of Michael Dyson Associates Limited.

NOTES

REV	DATE	AMENDMENTS	BY	APR'D

West House, Meltham Road, Honley,
Huddersfield HD9 6LB
t. 01484 666888 f. 01484 664186
w. www.mdyson.co.uk

CLIENT :
RPS PLANNING & DEVELOPMENT

PROJECT :
STRUCTURAL SURVEYS TO 4NR REEMA FLATS BLOCKS IN MILTON KEYNES

TITLE :
COMMUNAL STAIRCASE FIRST FLOOR PLAN RUTLAND HOUSE

DRAWN BY :	NG	APPROVED BY :	
DATE :	28-08-2013	DATE :	
SCALE :	1:30	ORIGINAL DRAWING SIZE 841 x 594 - A1	
DRAWING No :	811-(REEMA)-7551	REV.	

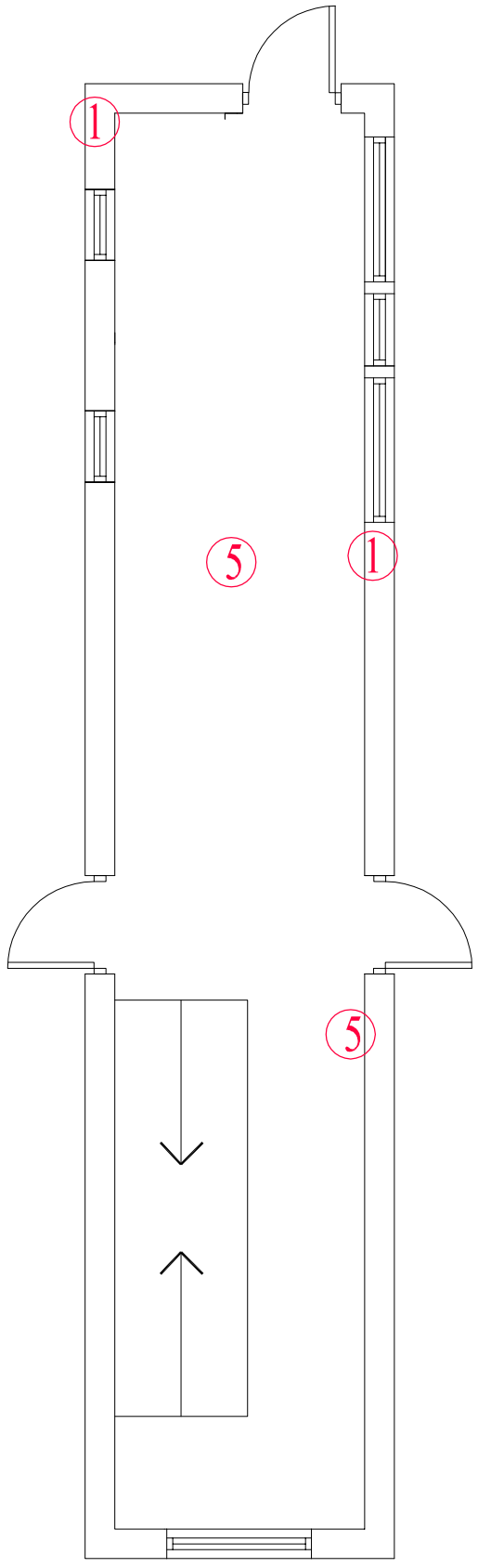

COMMUNAL STAIRCASE SECOND FLOOR PLANS
(Scale 1:30)

10 30 50
20 40

Do not scale from this drawing.
All dimensions must be checked on site by the Contractor prior to the commencement of any fabrication or building works.
Where applicable, dimensions and details are to be read in conjunction with specialist consultants' drawings and/or other specifications; any disparity is to be brought to the attention of Michael Dyson Associates Limited prior to the commencement of any fabrication or building works.
©This drawing is the property and copyright of Michael Dyson Associates Limited; It shall not be copied to any other party without the express written consent of an authorised director of Michael Dyson Associates Limited.

NOTES

REV	DATE	AMENDMENTS	BY	APR'D

West House, Meltham Road, Honley,
Huddersfield HD9 6LB
t. 01484 666888 f. 01484 664186
w. www.mdyson.co.uk

CLIENT :

R5PS PLANNING & DEVELOPMENT

PROJECT :

STRUCTURAL SURVEY OF 4NR REEMA FLATS BLOCKS IN MILTON KEYNES

TITLE :

COMMUNAL STAIRCASE SECOND FLOOR PLAN RUTLAND HOUSE

DRAWN BY :	NG	APPROVED BY :	
DATE :	28-08-2013	DATE :	
SCALE :	1:30	ORIGINAL DRAWING SIZE 841 x 594 - A1	
DRAWING No :	812-(REEMA)-7551	REV.	

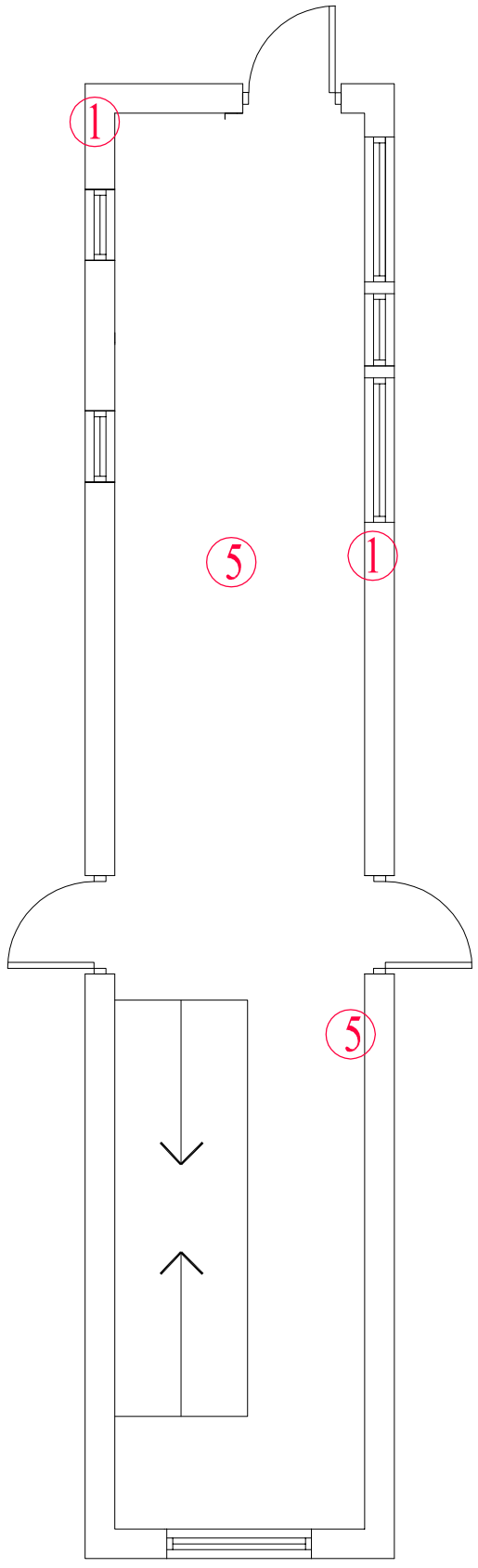

COMMUNAL STAIRCASE SECOND FLOOR PLANS
(Scale 1:30)

10 30 50
20 40

Do not scale from this drawing.
All dimensions must be checked on site by the Contractor prior to the commencement of any fabrication or building works.
Where applicable, dimensions and details are to be read in conjunction with specialist consultants' drawings and/or other specifications; any disparity is to be brought to the attention of Michael Dyson Associates Limited prior to the commencement of any fabrication or building works.
©This drawing is the property and copyright of Michael Dyson Associates Limited; It shall not be copied to any other party without the express written consent of an authorised director of Michael Dyson Associates Limited.

NOTES

REV	DATE	AMENDMENTS	BY	APR'D

West House, Meltham Road, Honley,
Huddersfield HD9 6LB
t. 01484 666888 f. 01484 664186
w. www.mdyson.co.uk

CLIENT :

R5PS PLANNING & DEVELOPMENT

PROJECT :

STRUCTURAL SURVEY OF 4NR REEMA FLATS BLOCKS IN MILTON KEYNES

TITLE :

COMMUNAL STAIRCASE SECOND FLOOR PLAN RUTLAND HOUSE

DRAWN BY :	NG	APPROVED BY :	
DATE :	28-08-2013	DATE :	
SCALE :	1:30	ORIGINAL DRAWING SIZE 841 x 594 - A1	
DRAWING No :	812-(REEMA)-7551	REV.	

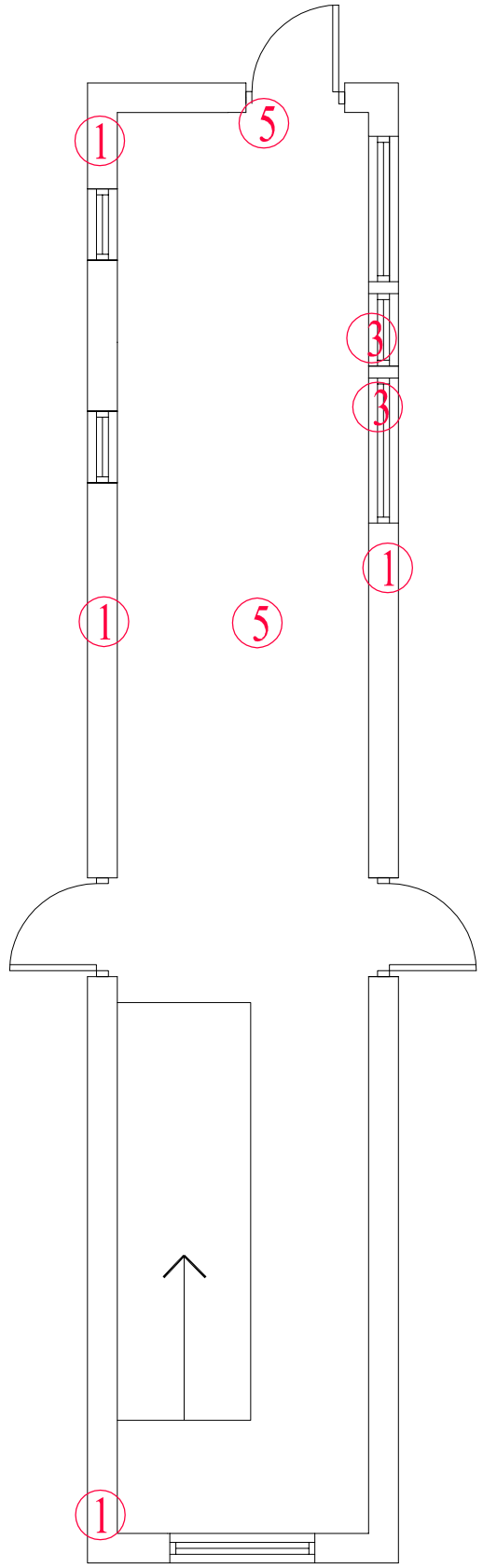

COMMUNAL STAIRCASE THIRD FLOOR PLAN
(Scale 1:30)

10 30 50
20 40

Do not scale from this drawing.
All dimensions must be checked on site by the Contractor prior to the commencement of any fabrication or building works.
Where applicable, dimensions and details are to be read in conjunction with specialist consultants' drawings and/or other specifications; any disparity is to be brought to the attention of Michael Dyson Associates Limited prior to the commencement of any fabrication or building works.
©This drawing is the property and copyright of Michael Dyson Associates Limited; It shall not be copied to any other party without the express written consent of an authorised director of Michael Dyson Associates Limited.

NOTES

REV	DATE	AMENDMENTS	BY	APR'D

West House, Meltham Road, Honley,
Huddersfield HD9 6LB
t. 01484 666888 f. 01484 664186
w. www.mdyson.co.uk

CLIENT :
RPS PLANNING & DEVELOPMENT

PROJECT :
STRUCTURAL SURVEY TO 4NR REEMA FLATS BLOCKS IN MILTON KEYNES

TITLE :
COMMUNAL STAIRCASE THIRD FLOOR PLAN
RUTLAND HOUSE

DRAWN BY :	NG	APPROVED BY :	
DATE :	28-08-2013	DATE :	
SCALE :	1:30	ORIGINAL DRAWING SIZE 841 x 594 - A1	
DRAWING No :	813-(Reema)-7551	REV.	

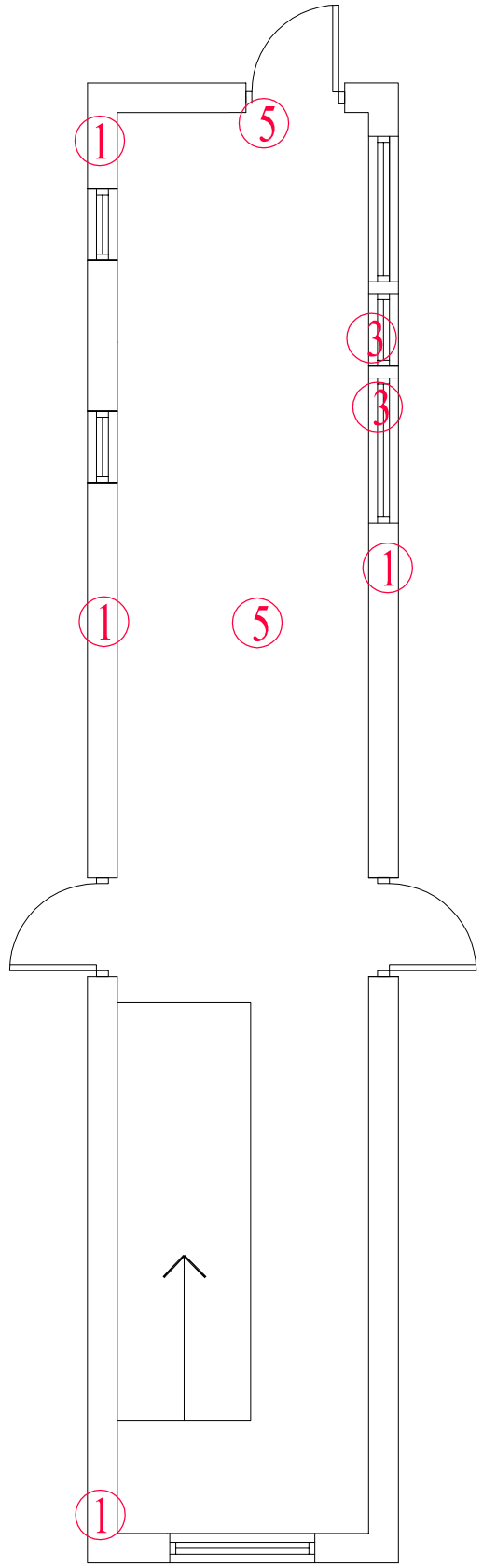

COMMUNAL STAIRCASE THIRD FLOOR PLAN
(Scale 1:30)

10 30 50
20 40

Do not scale from this drawing.
All dimensions must be checked on site by the Contractor prior to the commencement of any fabrication or building works.
Where applicable, dimensions and details are to be read in conjunction with specialist consultants' drawings and/or other specifications; any disparity is to be brought to the attention of Michael Dyson Associates Limited prior to the commencement of any fabrication or building works.
©This drawing is the property and copyright of Michael Dyson Associates Limited; It shall not be copied to any other party without the express written consent of an authorised director of Michael Dyson Associates Limited.

NOTES

REV	DATE	AMENDMENTS	BY	APR'D

West House, Meltham Road, Honley,
Huddersfield HD9 6LB
t. 01484 666888 f. 01484 664186
w. www.mdyson.co.uk

CLIENT :
RPS PLANNING & DEVELOPMENT

PROJECT :
STRUCTURAL SURVEY TO 4NR REEMA FLATS BLOCKS IN MILTON KEYNES

TITLE :
COMMUNAL STAIRCASE THIRD FLOOR PLAN
RUTLAND HOUSE

DRAWN BY :	NG	APPROVED BY :	
DATE :	28-08-2013	DATE :	
SCALE :	1:30	ORIGINAL DRAWING SIZE 841 x 594 - A1	
DRAWING No :	813-(Reema)-7551	REV.	